129-263

TRANSCRIPT OF RECORD.

SUPREME COURT OF THE UNITED STATES.

OCTOBER TERM, 1888.

No. 165.

THE MORLEY SEWING MACHINE COMPANY AND THE MORLEY BUTTON SEWING MACHINE COMPANY, APPELLANTS,

vs.

CHARLES B. LANCASTER.

APPEAL FROM THE CIRCUIT COURT OF THE UNITED STATES FOR THE DISTRICT OF MASSACHUSETTS.

FILED OCTOBER 20, 1885.

SUPREME COURT OF THE UNITED STATES.

OCTOBER TERM, 1888.

No. 165.

THE MORLEY SEWING MACHINE COMPANY AND THE MORLEY BUTTON SEWING MACHINE COMPANY, APPELLANTS,

vs.

CHARLES B. LANCASTER.

APPEAL FROM THE CIRCUIT COURT OF THE UNITED STATES FOR THE DISTRICT OF MASSACHUSETTS.

INDEX.

	Original.	Print.
Caption	1	1
Bill of complaint	2	1
Answer	6	5
Replication	10	8
Final decree	10a	8
Evidence for complainants	11	9
Exhibits offered	11	9
Deposition of Henry A. Chapin	12	9
Evidence for defendant	31	23
Deposition of Samuel F. Crosman	31	23
Henry B. Renwick	38	29
Andrew H. Jackman	62	46
George D. Fearey	70	52
Hubert H. Brennan	80	60
Joseph G. Knights	86	64
Harnden H. Jennings	100	75
Albert H. Sawtell	110	82
Frank Bridgham	122	90
George W. Musso, Jr.	130	96
John Franklin Harris	133	99
Mary E. Howe	139	103

JUDD & DETWEILER, PRINTERS, WASHINGTON, JULY 2, 1888.

	Original.	Print.
Testimony of Katie F. Flynn	146	108
Harnden H. Jennings (second deposition)	153	113
Stipulation as to introduction of patents	155	115
Evidence for complainants in reply	156	115
Deposition of Charles A. Sinclair	156	115
Henry A. Chapin	166	123
Further evidence for defendant	175	129
Deposition of Albert H. Sawtell	175	129
Exhibits	182	134
Letters patent of the United States, No. 236,350, granted Jan. 4, 1881, to James H. Morley, assignor of two-thirds to E. S. Fay and Henry E. Wilkins, "machine for sewing buttons on fabrics," etc. (Complainants' Exhibit C, put in evidence, p. 11.	182	134
Letters patent of the United States, No. 268,269, granted Nov. 28, 1882, to Joseph Mathison, assignor to himself, William D. Allen and C. B. Lancaster, "machine for sewing on buttons." (Defendant's Exhibit put in evidence, p. 155.)	195	146
Opinion of the court	206	155
Prayer for reversal and assignment of errors	214	159
Clerk's certificate	216	160
Bond	217	161
Citation	218	162
Proof of service of citation	219	162

1 UNITED STATES OF AMERICA, *Massachusetts District*, } *ss:*

At a circuit court of the United States for the first circuit, begun and holden at Boston, within and for the district of Massachusetts, on Wednesday, the fifteenth day of October, in the year of our Lord one thousand eight hundred and eighty-four, before the Honorable Le Baron B. Colt, circuit judge.

MORLEY SEWING MACHINE COMPANY *et al.*, Complainants, *v.* CHARLES B. LANCASTER, Defendant. } In Equity.

The bill of complaint in this cause was filed in the clerk's office on the sixth day of November, A. D. 1882, and was duly entered at the October term of this court, A. D. 1882, and is in the words and figures following:

2 *Bill of Complaint.* (*Filed Nov.* 6, 1882.)

To the honorable the judges of the circuit court of the United States for the district of Massachusetts:

The Morley Sewing Machine Company and the Morley Button Sewing Machine Company, corporations duly organized under the laws of Maine, and citizens of said State, bring this their bill of complaint against Charles B. Lancaster, of Newton, in said Commonwealth of Massachusetts, and a citizen thereof; and thereupon your orators complain and say—

That one James H. Morley, then of Holyoke, Mass., was the original and first inventor of a certain improvement in machines for sewing buttons on fabrics, more fully described in the letters patent hereinafter mentioned, and which had not been known or used before his said invention, and which, at the time of his application for a patent, as hereinafter mentioned, had not been for more than two years in public use or on sale with his consent or allowance.

And your orators, on information and belief, further show unto your honors that said James H. Morley, being so as aforesaid the first inventor and discoverer of said improvements, and being also a citizen of the United States, did, on the fourth day of Janu-

2*a* ary, A. D. 1881, upon due application therefor, obtain letters patent of the United States for said invention in due form of law, under the seal of the Patent Office of the United States, signed by the Secretary of the Interior and countersigned by the Commissioner of Patents of the United States, bearing date the day and year last aforesaid, and numbered No. 236,350, whereby there was granted and secured to said James H. Morley, E. S. Fay, and Henry E. Wilkins, assignees of said Morley, their heirs, administrators, assigns, or intended so to be, for the term of seventeen years from and after the date of said letters patent, the full and exclusive right and lib-

erty of making, constructing, using, and vending to others to be used the said invention and improvements, as set forth in said letters patent, which are now remaining on record in the Patent Office of the United States; and by virtue whereof said James H. Morley, E. S. Fay, and Henry E. Wilkins became and were the sole owners of all the rights and privileges granted and secured or intended to be granted and secured in and by said letters patent, as by said letters patent, or a duly certified copy thereof, here in court to be produced, will fully and at large appear.

And your orators further show unto your honors that on or about the twenty-fourth day of January, A. D. 1881, by virtue of sundry mesne assignments, your orator, the Morley Sewing Machine Company, became and now is the sole and exclusive owner of said letters patent, as by said mesne assignments, or duly authenticated copies thereof, here in court to be produced, will more fully and at large appear.

And your orators further show unto your honors that on said twenty-fourth day of January, A. D. 1881, by certain mesne instruments of license, which, or duly authenticated copies whereof, will be here in court produced, your orator, the Morley Button Sewing Machine Company, became vested and is now vested with the sole and exclusive right and license to use the said invention in said letters patent described for the sewing of buttons upon leather, cloth, or other fabrics.

And your orators further show unto your honors that, by virtue of the premises, your orator, the Morley Sewing Machine Company, became and now is the sole and exclusive owner of said letters patent and the inventions and improvements described therein,
3 and of all the rights and privileges granted and secured, or intended to be granted and secured, thereby, and your orator, the Morley Button Sewing Machine Company, of the exclusive right to use the same in sewing buttons on leather and other fabrics, and that since they became the owners thereof, as aforesaid, they have invested and expended large sums of money, and have been to great trouble in and about said invention, and for the purpose of carrying on the business of building and using said machines and making the same profitable to themselves and useful to the public, and that said invention has been and is of great benefit and advantage, and that large numbers of machines were made according to said invention and sold by the Morley Button Sewing Machine Company, your orator, to the great advantage of the public, and that the public have generally acknowledged and acquiesced in the aforesaid rights of your orators, and your orators believe that they will realize and receive large gains and profits therefrom if infringements by said defendant and his confederates shall be prevented.

Yet the said defendant, well knowing the premises and the rights secured to your orators aforesaid, but contriving to injure your orators, and to deprive them of the benefits and advantages which might, and otherwise would, accrue unto them from said invention, after the issuing of the United States letters patent, as aforesaid, and before the commencement of this suit, did, as your orators are in-

formed and believe, without the license or allowance, and against the will of your orators, and in violation of their rights, and in infringement of the aforesaid letters patent, at Lynn, within said district, unlawfully and wrongfully, and in defiance of the rights of your orators, make, construct, use, and vend to others to be used, the said invention, and did make, construct, use, and vend to others to be used, machines for sewing buttons upon leather, cloth, or other fabrics, made according to and employing and containing said invention, and that he still continues so to do, and that he is threatening to make the aforesaid machines in large quantities, and to supply the market therewith, and to sell the same—

All in defiance of the rights acquired by and secured to your orators as aforesaid, and to their great and irreparable loss and injury, and by which they have been and still are being de-
4 prived of great gains and profits which they might and otherwise would have obtained, but which have been received and enjoyed, and are being received and enjoyed, by the said defendant, by and through his aforesaid unlawful acts and doings.

And your orators further show unto your honors, on information and belief, that said defendant has sold large quantities of said machines and has a large quantity on hand which he is offering for sale, and has made and realized large profits and advantages therefrom, but to what extent and how much exactly your orators do not know and pray a discovery thereof; and your orators say that the use of the said invention by said defendant, and his preparation for and avowed determination to continue the same, and his other aforesaid unlawful acts in disregard and defiance of the rights of your orators, have the effect to and do encourage and induce others to venture to infringe said patent in disregard of your orators' rights.

And your orators further show unto your honors that they have caused notice to be given to said defendant of said infringements, and of the rights of your orators in the premises, and requested him to desist and refrain therefrom, but he has disregarded said notice and refused to desist from said infringements, and still continues to make and sell said machines.

And forasmuch as your orators can have no adequate relief except in this court, to the end, therefore, that the said defendant may, if he can, show why your orators should not have the relief hereby prayed, and may (but not upon oath, your orators hereby expressly waiving such oath), according to his best and utmost knowledge, remembrance, information, and belief, full, true, direct, and perfect answers make to the premises, and to all the several matters hereinbefore stated and charged as fully and particularly as if severally and separately interrogated as to each and every of said matters, and may be compelled to account for and pay to your orator the profits by him acquired and the damages suffered by your orators from the aforesaid unlawful acts:

Your orators pray that said defendant, Charles B. Lancaster, his servants, agents, attorneys, and workmen, and each and every of them, may be restrained and enjoined, provisionally and per-

5 petually, by the order and injunction of this honorable court, from directly or indirectly making, constructing, using, vending, delivering, working, or putting into practice, operation, or use, or in anywise counterfeiting or imitating the said invention or any part thereof or any machines made in accordance therewith or like or similar to those which the defendant has heretofore made, and that the said defendant may be decreed to pay the cost of this suit, and that your orators may have such further relief or such other relief as to this honorable court shall seem meet and as shall be agreeable to equity.

May it please your honors to grant unto your orators the writ of injunction, as well provisional as perpetual, issuing out of and under the seal of this honorable court, commanding, enjoining, and restraining the said defendant, Charles B. Lancaster, and his servants, agents, attorneys, and workmen, and each and every of them, as is hereinbefore in that behalf prayed.

May it please your honors to grant unto your orators the writ of subpœna, is suing out of andunder the seal of this honorable court, directed to the said defendant, Charles B. Lancaster, commanding him, by a certain day and under a certain penalty, to be and appear in this honorable court, then and there to answer the premises, and to stand to and abide such order and decree as may be made against him.

And your orators will ever pay, etc.

MORLEY SEWING MACHINE COMPANY,
By CHAS. A. SINCLAIR, *Treasurer.*
MORLEY BUTTON SEWING MACHINE COMPANY,
By CHAS. A. SINCLAIR, *Treasurer.*

AMBROSE EASTMAN,
Complainants' Solicitor.
B. F. THURSTON,
Of Counsel.

UNITED STATES OF AMERICA, *District of Massachusetts,* } *ss:*

On this sixth day of November, 1882, before me personally appeared Charles A. Sinclair, treasurer of each of the companies,
6 the above-named complainants, who, being by me duly sworn, on oath deposes and says that he is treasurer, as aforesaid; that he has read the foregoing bill of complaint subscribed by him and knows the contents thereof, and that the same is true of his own knowledge, except as to the matters therein stated on information and belief, and as to these matters he believes it to be true.

Before me—
[SEAL.]

AMBROSE EASTMAN,
Notary Public.

On the fourth day of January, A. D. 1883, the following answer was filed:

Answer. (*Filed Jan.* 4, 1883.)

To the honorable the judges of the circuit court of the United States for the district of Massachusetts:

Charles B. Lancaster, summoned as defendant in the above-entitled cause, saving and reserving to himself all and all manner of benefit that may be taken, by exception or otherwise, to the many errors, omissions, and insufficiencies of the bill of complaint in the above-entitled cause, for answer thereto, or to so much thereof as he is advised is material or necessary for him to make answer unto, says:

1. That he is a resident of Newton, in the Commonwealth of Massachusetts, and is a citizen of the said Commonwealth.

2. That he has no knowledge or information sufficient to form a belief and has no belief whether the complainant, The Morley Sewing Machine Company, or the complainant, The Morley Button Sewing Machine Company, is a corporation duly organized under the laws of the State of Maine, nor as to whether either of the said companies is a citizen or are citizens of the said State of Maine, and leaves complainants to make proof thereof as they may be advised.

3. That as to whether James H. Morley, then of Holyoke, Mass., was the inventor of improvements in machines for sewing buttons on fabrics, described in letters patent No. 236,350, and not in public use for more than two years, or on sale with his consent or
7 allowance at the time of applying for said patent, this defendant has no knowledge or information except that derived from the inspection of the bill of complaint in this cause and of the letters patent set up therein, and not sufficient to form a belief, and has no belief, and leaves complainants to make proof thereof as they may be advised.

4. This defendant admits that James H. Morley did, on the fourth day of January, A. D. 1881, obtain letter patent No. 236,350, and of the proceedings in due form of law, which said letters patent are still outstanding.

5. As to the allegation of the bill that said letters patent were, on or about Jan. 24, 1881, or at any other time, vested in The Morley Sewing Machine Company, complainant, or that licenses for using the same were, on the same twenty-fourth day of January, 1881, vested in The Morley Button Sewing Machine Company, complainant, this defendant has no knowledge or information, save as derived from the bill of complaint, not sufficient to form a belief, and has no belief, and leaves complainants to make proof thereof as they may be advised.

6. As to the work done and expenditures made by the complainants in or about the business of building or using the machines set up in the bill of complaint, this defendant has little knowledge or information, save as derived from the bill of complaint, and not

sufficient to form a belief, and has no belief, and leaves complainants to make proof thereof as they may be advised.

7. And this defendant *claims* all and all manner of combination and confederacy and contrivance to injure the complainants set up in the bill.

8. And this defendant denies constructing, using, and vending to others to be used, machines for sewing buttons upon leather, cloth or other fabric made according to and employing and containing the invention described in the said Morley letters patent, and denies threatening or intending to make the aforesaid machines in large quantities or any quantities, and supply the market therewith, and to sell the same in the manner and form as set up in the bill.

9. And this defendant denies that any act or thing done by him is in defiance of rights acquired by and secured to the complainants in this case or either of them, or to their great or irreparable
8 loss or injury, or that it hath deprived the complainants of great or any gains or profits, or that it hath caused the complainants or either of them any damage, or that he has sold large or any quantities of said machines, or has large or any quantity of said machines on hand, or that he is offering the same for sale, or that he has realized large or any profits thereform, or that he has done any unlawful act in disregard and defiance of the rights of the complainants or either of them, or that any act or thing that this defendant has done has the effect to encourage or does encourage or induce others to venture to infringe complainants' alleged patent, as set up in the bill.

10. And this defendant denies the disregard by him of any notice concerning infringements on the said letters patent.

11. And this defendant, further answering, says that prior to the grant of the said letters patent to said Morley, and prior to the pretended invention of said Morley of the machine described therein, substantial and material parts of the pretended invention therein described were shown and described in letters patent No. 130,581, dated Aug. 20, 1872, to Jeremiah Keith, of Charlton, Mass., and were known and used by said Jeremiah Keith at said Charlton, Mass., and at other places, of which your orator will hereafter inform the court as he shall be advised thereof.

And that certain other substantial and material parts of the invention described in said Morley letters patent were, prior to said Morley's invention, shown and described in the following English letters patent, to wit:

No. 2837, of A. D. 1853, to Julian Bernard,
No. 1959, of A. D. 1854, to Samuel Freason,
No. 2768, of A. D. 1857, to Thomas Lowe,

and were described and shown in printed publications of the Great Seal Patent Office, in England, bearing the titles of the specifications of said enumerated letters patent;

And in a certain French letters patent to Sieur Lecoq (Emile Felix), dated Aug. 21, 1854;

And were also known and used by F. A. Crosby, of Lynn, in the county of Essex and State of Massachusetts, at said Lynn.

12. And this defendant, further answering, says that he is advised and believes, and therefore avers, that substantial and
9 material parts of the mechanism described in the said Morley letters patent and referred to in the claims thereof are mere aggregations of machinery, put together without modifications, by their assemblage in the same machine of the action of the other parts of the machine, and that the claims of the said Morley patent referring thereto are void as claims for mere aggregations.

And this defendant is further advised, and therefore avers, that the first, second, eighth, and thirteenth claims of the said Morley letters patent are claims for mere aggregation of mechanism within the same machine, which do not interchangeably modify or affect the action and work of the machine, and are inoperative except by virtue and in consequence of the appliances and devices which serve to connect the same together, and that those appliances are essential parts of the machine, to be construed into the said claims as integral parts thereof in order to make the same valid.

14. And this defendant, further answering, says that he has made and experimented with certain button sewing machines adapted to make the stitch shown and described in letters patent No. 268,370, dated Nov. 28, 1882, said machines being substantially of the construction shown and described in letters patent granted to Joseph Matheson, assignor to himself, and William D. Allen, and this defendant, dated Nov. 28, 1882, and numbered 268,369, which said letters patent also contain certain material operative parts and combinations described, shown, and patented to said Joseph Matheson, assignor as aforesaid, on the tenth day of January, 1862, by letters patent No. 252,117, to which Matheson letters patent, No. 252,117, this defendant begs leave to refer as your honor shall permit.

15. And this defendant is advised and believes, and therefore avers, that the mechanism and combination of mechanism, and the method of forming the stitch and of attaching the buttons to the cloth, described in said Matheson patents, and the mechanism and combination of mechanism and method of forming the stitch, embodied in the said machine built and experimented with by this defendant, are materially and essentially different from the method of stitch formation, of stitch mechanism and combination of mechanism described and shown in the said Morley patent set up in
10 the bill of complaint in this case, and that the said mechanism of the Matheson patent is legitimately combined and not aggregated together by means entirely and essentially distinct from the mechanism described in the said Morley patent, and in no way in infringement and imitation thereof.

Without this, that there is any other matter or thing in said bill of complaint contained material or shown in law to be answered unto, confessed or avoided, traversed or denied, true to the knowledge and belief of this defendant, and humbly prays to be hence dismissed with his reasonable costs and charges in this behalf most wrongfully sustained.

CHARLES B. LANCASTER.

STATE OF MASSACHUSETTS, *Suffolk*, } ss:

On this fourth day of January, A. D. 1883, personally appeared the said defendant, Charles B. Lancaster, who subscribed the foregoing answer, and made oath that he understood the contents thereof, and that the same was true of his own knowledge, except as to the matters therein stated on information, which he believes to be true.

Before me—
[SEAL.]

GEO. E. SMITH,
Notary Public.

On the sixteenth day of February, 1883, the following replication was filed:

Replication. (*Filed Feb.* 16, 1883.)

These repliants, saving all exceptions to the said answer, for replication thereunto say that they will prove their said bill of complaint to be true, certain, and sufficient in law to be answered unto, and that the said answer is uncertain, untrue, and insufficient to be replied unto by these repliants, without this, that any other matter or thing in the said answer contained material or effectual in the law to be replied unto, confessed and avoided, traversed or denied, is true; all which matter and things these repliants are ready to aver and prove as this honorable court shall direct, and humbly pray as in and by said bill they have already prayed.

AMBROSE EASTMAN,
Solicitor and of Counsel.

10*a* *Final Decree.*

This cause was thence continued from term to term to this present October term, A. D. 1884, when publication of the testimony is had and the same is set down for hearing and fully heard by the court on the twentieth and twenty-first days of November, A. D. 1884. On the fifth day of March, A. D. 1885, the opinion of the court is given and the following decree is entered:

Decree. March 5, 1885.

And now, to wit, March 5, 1885, after due consideration thereon had, it is ordered, adjudged, and decreed by the court that the bill of complaint in this cause be, and the same is hereby, dismissed with costs for the defendant, taxed at three hundred and ninety-five dollars and forty-four cents.

From this decree the complainants in open court claim an appeal to the Supreme Court of the United States, and give good and sufficient security that they will prosecute their appeal to effect and answer all damages and costs if they fail to make their plea good, and said appeal is allowed.

A true record.

JOHN G. STETSON, *Clerk.*

11 The following is the evidence used at the hearing of said cause before said circuit court, namely:

Evidence for Complainants.

Taken pursuant to the sixty-seventh rule of the Supreme Court of the United States, in equity, as amended, before me, Henry Hyde Smith, special examiner.

BOSTON, MASS., *July* 16, 1883.

Present: Benjamin F. Thurston, Esq., and Ambrose Eastman, Esq., of counsel for complainants; Thomas W. Clarke, Esq., and George E. Smith, Esq., of counsel for defendant.

Ambrose Eastman, Esq., of counsel for complainants, puts in evidence certified copies of the certificates of incorporation of the Morley Sewing Machine Company and of the Morley Button Sewing Machine Company, and the same are marked, respectively, "Complainants' Exhibit A, H. H. S., Sp'l Ex'r," and "Complainants' Exhibit B, H. H. S., Sp'l Ex'r."

Mr. Eastman also puts in evidence a certified copy from the records of the Patent Office of the United States of letters patent No. 236,350, granted James H. Morley, E. S. Fay, and Henry E. Wilkins Jan. 4, 1881, for "improvement in machines for sewing buttons on fabrics, etc.," and the same is marked "Complainants' Exhibit C, H. H. S., Sp'l Ex'r."

Mr. Eastman also puts in evidence a certified copy from the records of the Patent Office of the United States of all instruments in writing found of record under said letters patent No. 236,350 up to and including April 21, 1883, and the same is marked "Complainants' Exhibit D, H. H. S., Sp'l Ex'r."

Attest:

HENRY HYDE SMITH,
Special Examiner.

12 *Deposition of Henry A. Chapin.*

BOSTON, *July* 16, *A. D.* 1883.

Direct examination by BENJAMIN F. THURSTON, Esq., of counsel for complainants:

Int. 1. What is your name, age, residence, and profession?

Ans. Henry A. Chapin; age, fifty-six; residence, Springfield, Mass.; profession, solicitor of patents, and I have been accustomed for several years to compare machinery and patents to determine questions of infringement, and have for some time past testified as expert in patent causes.

Int. 2. What special opportunities have you had for making yourself acquainted with machinery for sewing fabrics, and particularly with machinery for sewing or attaching buttons to fabrics?

Ans. I drew the specifications, and as attorney for the inventor, J. H. Morley, of patent No. 236,350, Jan. 4, 1881, made application

for said letters patent, and, in course of the proceedings thereon, I had occasion to examine the state of the art relative to feeding and sewing shank buttons to fabrics, and thereby became acquainted, more or less, with such machinery as parties had endeavored to use in that art.

Int. 3. Please look at letters patent now shown you, the same being letters patent of J. H. Morley, assignor of two-thirds to E. S. Fay and H. E. Wilkins, dated Jan. 4, 1881, No. 236,350, put in evidence in this case and marked "Complainants' Exhibit C, H. H. S., Sp'l Ex'r," and state what is the improvement of mechanism described in said patent and what are the combinations of devices recited in the first, second, eighth, and thirteenth claims of said patent.

Ans. I have examined the letters patent mentioned in the question and understand the improvement of mechanism described therein to consist of a combination with sewing devices of mechanism for automatically feeding shank buttons to a position where they can be, one at a time, operated upon by a needle and thread to secure them to a fabric, and of means for feeding the fabric along to
13 properly space the buttons thereon. The combination of devices recited in the first claim of said letters patent to Morley consists of "in a machine for sewing shank buttons to fabrics, of button-feeding mechanism, appliances for passing the thread through the eye of the buttons and locking the loop to the fabric, and feeding mechanism, substantially as set forth." The combination of devices set forth in the second claim is as follows: "The combination, in a machine for sewing shank buttons to fabrics, of a needle and operating mechanism, appliances for bringing the buttons successively to positions to permit the needle to pass through the eye of each button, and means for locking the loop of thread carried by the needle to secure the button to the fabric, substantially as set forth." The combination of devices set forth in the eighth claim is as follows: "The combination, in a machine for sewing buttons to fabrics, of button-feeding and sewing appliances, substantially as set forth, and feeding appliances and operating mechanism, whereby the feeding devices are moved alternately different distances to alternate short button stitches with long stitches between the buttons, as specified." The combination of devices set forth in the thirteenth claim is as follows: "The combination, with button-sewing appliances, of a trough, appliances for carrying the buttons successively from the trough to the sewing devices, and mechanism for operating said appliances and sewing devices, as set forth."

Int. 4. Are you familiar with the machine used by the defendant, Charles B. Lancaster? And state when, before the commencement of this suit, and where you examined the same, and also state whether you did or did not make a critical examination of the same.

Ans. I think I understood a machine which was being used by Charles B. Lancaster, the defendant in this suit, previous to the time at which this suit was brought, which machine I examined,

so far as I was able to, by sitting beside the operator and seeing it worked, and without dissecting said machine, on the 11th of October, 1882, at the factory of the said Lancaster, in Lynn, Mass., at which time I asked several questions of the operator of the machine for the purpose of ascertaining its construction, to which questions I received proper replies. I think I saw said machine in operation from a half to three-quarters of an hour.

14 Int. 5. State whether you have in your possession, and, if so, produce it, any specimen of the product turned out by the said Lancaster machine, and also state whether you saw the machine make the specimen produced.

Ans. I have in my possession a specimen of the product turned out by the said Lancaster machine, and I produce it, said specimen being marked by me on that day as follows: "October 11, 1882, H. A. C." The said specimen was made by the operator at my request and in my presence upon the said Lancaster machine, and by him given to me.

(Specimen produced is marked "Complainants' Exhibit E, H. H. S., Spe'l Ex'r.")

Int. 6. Please look at the letters patent numbered 268,369, dated Nov. 28, 1882, granted to Joseph Matheson, assignor to himself, William D. Allen, and C. B. Lancaster, and state whether the said Lancaster machine, which you say you saw and examined, was substantially the same as the machine described in the letters patent 268,369.

(Objected to as leading.)

Ans. I have examined said letters patent No. 268,369, and I should say that the said Lancaster machine which I saw in operation on the eleventh day of October, A. D. 1882, as before testified, was constructed substantially like the machine described in said letters patent.

Int. 7. State whether the said Lancaster machine which you say you examined, and whose operation you say you witnessed, does or does not, in your opinion, contain any of the inventions or improvements specified in said Morley letters patent, and recited in the first, second, eighth, and thirteenth claims of said patent, and give fully the reasons for any opinion you may express, and describe the construction of the said Lancaster machine in the particulars wherein you may say it contains the subject of any invention recited in any of said claims.

Ans. In my opinion, the said Lancaster machine does contain the inventions and improvements specified in said Morley letters patent, and recited in the first, second, eighth, and thirteenth claims

15 of said patent to Morley, inasmuch as I find in said Lancaster machine the combination of button-feeding mechanism, appliances for passing the thread through the eye of the buttons and locking the loop to the fabric, and feeding mechanism; also the combination of a needle and operating mechanism, appliances for bringing the buttons successively to positions to permit the

needle to pass through the eye of each button, and means for locking the loop of thread carried by the needle to secure the button to the fabric; also the combination of button-feeding and sewing appliances, and feeding appliances, and operating mechanism, whereby the feeding devices are moved alternately different distances to alternate short button stitches with long stitches between the holes; also the combination, with button-sewing appliances, of a trough, appliances for carring the buttons successively from the trough to the sewing devices, and mechanism for operating said appliances and sewing devices. The said Lancaster machine contains a button hopper, having a trough or raceway leading therefrom to carry the buttons to the sewing devices thereof and present them to the latter in position to have the needle and thread operate upon them; and it also contains sewing devices for passing the loop through the eye of the button and locking the latter to the fabric; and it also possesses devices for feeding the fabric along and to alternate short button stitches with long stitches between the buttons; all of which devices are described and claimed in the said Morley patent.

Cross-examination by THOMAS W. CLARKE, Esq., of counsel for defendant:

Cross-int. 8. Your only acquaintance with machinery for sewing or attaching buttons to fabrics, as such machinery has been used, was, as I understand you, the observation of the Lancaster machine during about an hour, more or less, and the observation of the Morley machine; the other machinery, "as parties had endeavored to use in that art," you know of only from descriptions and drawings, as I understand you. Am I correct?

Ans. The assumption of the question is correct in so far as it quotes correctly from the answer which I made relating to that matter. I never saw a machine embodying mechanical appli-
16 ances for feeding and sewing shank buttons to fabrics, constituting a completely operating machine for that purpose, before I saw the Morley machine.

Cross-int. 9. That doesn't quite answer the question. Did you ever see a machine for sewing buttons to fabrics except the Morley and the Lancaster machines?

Ans. I never saw a machine for sewing buttons to fabrics and of itself manipulating the buttons to permit of sewing them before I saw the Morley machine. The next machine that I saw which manipulated of itself the buttons and sewed them on was a Lancaster machine.

Cross-int. 10. That wasn't the question. Did you ever see a machine for sewing buttons to fabrics except the Morley and Lancaster machines? Please answer this question without adding the condition, which isn't in it, "of itself manipulating the buttons to permit of sewing them."

Ans. I never saw a machine that did the kind of work that the Morley and Lancaster machines are capable of doing.

Cross-int. 11. You have seen, then, a machine for sewing buttons to fabrics other than the Morley and Lancaster machine?

Ans. I believe I did not say that.

Cross-int. 12. I am aware that you didn't say it; but have you not, as a fact?

Ans. I do not think that I ever saw a machine which was capable unassistedly of sewing a shank button onto a fabric before I saw the Morley machine.

Cross-int. 13. You have seen, have you not, what purported to be the machine patented by Jeremiah Keith for sewing buttons to fabrics?

Ans. I saw a model of a machine in the Patent Office in Washington which was said to be a model filed by the said Keith in his application dated, if I am not mistaken, Aug. 20, 1872. Said model was not examined by me until some time after I was acquainted with and had seen the Morley machine.

Cross-int. 14. That is the only embodiment of the machine of Jeremiah Keith that you ever saw, is it?

Ans. I think it is.

17 Cross-int. 15. Have you not seen another machine which purported to be an embodiment of the machine of Jeremiah Keith, with some additions?

Ans. I don't think that I ever saw any other machine which was represented to me as being Keith's machine.

Cross-int. 16. When you say Keith's machine in your last answer you mean the machine described in the Keith patent, don't you?

Ans. I give the same meaning to the words "Keith's machine" as is given in the question as I understand it.

Cross-int. 17. As the words "Keith's machine" were not used in Int. 15, will you please answer Int. 16?

Ans. It was my intention in Ans. 16 to say that I give the same meaning to the words "Keith's machine" as is given in Int. 15 to the words "the machine of Jeremiah Keith," as I understand it.

Cross-int. 18. Now, will you please tell me whether you understood the words in Int. 15, "the machine of Jeremiah Keith," and the words in the answer, "Keith's machine," to mean the machine described in the Keith patent?

Ans. I have understood references heretofore made in the questions to "the machine of Jeremiah Keith," or to "Keith's machine," as meaning the machine described in the said Keith patent, and when I have mentioned "Keith's machine" I have made reference only to the machine described in the Keith patent, the model of which I said I saw in Washington.

Cross-int. 19. Have you ever seen Jeremiah Keith, or a man purporting to be, or represented to be, Jeremiah Keith, or conversed with a man purporting to be Mr. Keith, the patentee of a machine for sewing on buttons?

Ans. I have seen a man who represented himself to be Jeremiah Keith, who told me he was the patentee mentioned in said letters patent of 1872, and I think he told me that that was the only machine that he had ever invented or patented—something of that sort.

It was some time ago and I hardly recollect the conversation, but that was the purport of it.

18 (Motion to strike out all of the answer beginning "I think he told me," to the end, as irresponsive.)

Cross-int. 20. Did you call upon Mr. Keith for this interview or he call upon you?

Ans. He called upon me.

Cross-int. 21. Did he, at any interview you ever had with him, show you a machine or model of a machine for sewing on buttons to fabrics?

Ans. He never did.

Cross-int. 22. Did any one, before, after, or at the time of your interview with Mr. Keith, show you a machine or model of a machine said to be made by Mr. Keith for sewing on buttons other than the Patent Office model you have referred to?

Ans. I don't recollect that any one has so done.

Cross-int. 23. How came Mr. Keith to call upon you, if you know?

Ans. He called upon me at my request.

Cross-int. 24. In the Morley patent, No. 236,350, will you please point out the parts and pieces which make up what is called in the first claim "button-feeding mechanism," referring to them by letter, as set forth in the descriptive part of the patent?

Ans. A button hopper, 44, having an inclined bottom, 73, a hopper valve, 56, a hopper valve guard, 57, a hopper valve bottom, 58, a valve rod, 52, a button trough, 45, a corrugated strip, 53, a vibratory serrated segment, 43, an arm, 47, a trough cover, 47*a*, a button-turning wheel, 60, a lever for operating the same, 41, a button carrier, 7, a button plunger, *h*, clamp jaws, *x x*, attached to the button carrier, a cam, 4, and a lever, 5*e*, for giving said carrier a reciprocating motion, and a spiral spring, 8, for said button carrier.

Cross-int. 25. Are the parts and pieces which make up the button-feeding appliances referred to in the eighth claim of the Morley patent the same as the parts and pieces which make up the button-feeding mechanism referred to in the first claim of the Morley patent?

Ans. I suppose they are intended to refer to the same mechanism.

Cross-int. 26. The parts and pieces referred to in the phrase,

19 "appliances for carrying buttons from the trough to the sewing devices" have been enumerated in your twenty-fourth answer among the parts and pieces of the button-feeding mechanism, have they not?

Ans. They have.

Cross-int. 27. Are there any other parts and pieces than those enumerated in your twenty-fourth answer which are referred to in the second claim of the Morley patent as "appliances for bringing the buttons successively to positions to permit the needle to pass through the eye of each button;" and, if so, what are they?

Ans. I think there are no other main pieces. If there are I unintentionally overlooked them. In giving that answer I intended

to point out the main operative pieces of button-feeding mechanism. I find by referring to the claims of detailed parts in the Morley patent the following pieces are specified, which, I think, I did not include: The shaft *b*, the lever 5*a*, and the lever 5, a pin, *b*, in button carrier 7, a spring, 49, a spring, 55. The above constitute parts of the button-feeding mechanism or appliances.

(Adjourned.)

JULY 17, A. D. 1883.

(Witness continues:)

The button-feeding appliances above referred to are those shown and decribed in the drawings and specification of the Morley patent other than those shown and described therein as appertaining to the construction illustrated in Figs. 20, 21, and 22, which figures, said specification states, "show a modified construction of the button clamp on the end of the button carrier 7, and illustrate the manner of making a clamp to operate to take a button from the end of the button-feed trough when the latter terminates at the right of the needles, there being attached to the trough a flexible button stop, 68, and to the machine a stop-plate, 67, to co-operate with the parts of the button clamp to deliver buttons to the latter and cause the release of the button when it is carried over the needles to be operated upon. This construction dispenses with the use of the button-turning wheel 60 and its operating devices, and also with the button plunger *h*."

The question, if I construe it right, asks for information respecting the parts and pieces "which are referred to in the second claim of the Morley patent." In searching in the Morley patent to find the basis for an answer as to what is referred to in said second claim, I do not wish it to be understood that I state that said claim means when it says "appliances for bringing the buttons successively to positions to permit the needle to pass through the eye of each button" that precisely the devices which I have enumerated above are those meant by that claim, for I read in the Morley specification as follows: "Having thus described the machine and constructions set forth in the drawing, I wish it to be understood that the same is only one of the different mechanisms which I have contemplated, and which may be effectually employed for carrying out the main feature of my invention, to wit, the automatic mechanical sewing of buttons to a fabric."

Cross-int. 28. Is not a horizontal revolving dial, called in the Morley patent "the button-turning wheel 60," with the plunger *h* for removing the button, in the organization of Morley, essential to combine the button-feed trough of the Morley patent with the sewing mechanism thereof?

Ans. Referring to the modified construction shown in Figs 20, 21, and 22 of the Morley patent, and to which I have just referred, it is not essential to combine the said wheel 60 with the plunger *h* with the button-feed trough of the Morley patent and with the sewing mechanism thereof.

Cross-int. 29. What mechanism in the Lancaster machine combines the button-feeding trough with the sewing mechanism, so that buttons are taken from the trough and delivered to the needle which is to operate upon them?

Ans. When I visited the Lancaster shop, as above stated by me, and there witnessed and had described to me the operation of the machine to which I understand the question alludes, I understood the functions of the button-feeding mechanism of that machine and their operation to be such as is described in the United States letters patent to J. Matheson, No. 268,369, Nov. 28, 1882, which patent shows and describes a machine according to which I believe the said machine which I saw was constructed, or substantially so. I noticed that in said machine the button-feeding devices thereof, meaning the trough or raceway and hopper, had such movements given to them as caused the buttons to be separated from the
21 raceway one by one. The specific mechanism by which the buttons in said machine are so separated from each other one by one is not the same as that employed in the Morley patent, but the result, so far as providing buttons one by one for the needle to operate upon, is the same. I understand that in the Lancaster machine the lower end of the raceway is provided with a yielding spring, which projects wholly or partially across the raceway and bears against the lower buttons, and constitutes a yielding stop, holding each button therein in succession until a button is withdrawn from the raceway to be attached to the fabric.

A yielding spring, such as I have just mentioned, substantially, is shown on the end of the button-feeding trough in the Morley patent, and there performs substantially the same functions as the yielding spring on the end of the raceway in the Lancaster machine. The said movement of the raceway in the Lancaster machine was a swinging and a longitudinal one, which caused the delivering or lower end of the raceway to move diagonally from the position it occupied when presenting a button to the needle.

The mechanism in the Lancaster machine, which is combined with the button-feeding trough and with the sewing mechanism, as and for the purposes stated in the question (and now having reference to what I have explained about the feeding mechanism of said machine), is that which gives to the raceway the said swinging and longitudinal movement whereby the buttons are separated one by one from the raceway, the needle having passed through the eye of the lower button and holding it while the raceway so moves away from it.

Cross-int. 30. Then do you consider that, in the Matheson patent, to which you referred in your last answer, the raceway and spring and mechanism to give the swinging motion are the only parts of the machine described in the drawings and specification which combine the button-feeding trough with the sewing mechanism, so that buttons are hereby taken from the trough and delivered to the needle?

Ans. I did not intend to base my last answer upon said Matheson patent, but I said that I understood that the functions of the

22 button-feeding mechanism of the machine which I saw to be such as is described in that patent. I came to that conclusion by comparing one with the other. I do not undertake to state here the specific parts and pieces of mechanism which were both visible and invisible on the Lancaster machine which contributed to do the work which I have stated.

I have stated in an answer which I have already given that I did not see the Lancaster machine dissected.

All of the parts of the machine described in the Matheson patent which, directly and indirectly, contribute to automatically supply buttons to the sewing devices of the machine therein described, properly combine the mechanism which delivers buttons to the needle, and the needle in that machine, as does the needle in the Morley machine, assists in the final separation of each button in succession from the button-feeding devices.

The parts which I find designated in said Matheson patent as evidently operating together as button-feeding mechanism or appliances are a button reservoir, f^2, and inclined raceway leading therefrom, g^2, a yielding spring, w, on the end of the raceway, a post composed of two sections, h^2 and i^2, guides j^2 on the frame A, an arm, j^3, a screw, k^2, on arm j^3, the neck E with an inclined or diagonal surface, l^2, a spring, m^2, a lever, o^2, having a roller on one end engaging with a groove in a disc, s^2, a block, t^2, on the section i^2, with which the lever o^2 engages. Evidently all of the parts of the button-feeding mechanism of the machine which are shown in this Matheson patent are not pointed out and described therein, apparently for the reason that reference is made in this patent to a former patent of the same patentee, No. 252,117, dated Jan. 10, 1882, in which certain details are given which are not given in the patent referred to in the question. I believe that there should be added to the mechanism which I have mentioned above, as parts of the machine shown in patent 268,369, certain mechanism within the reservoir f which operates to cause the buttons to pass from it into the raceway; but I am not able to designate, from memory only, just what that mechanism is.

Cross-int. 31. In speaking of the yielding spring on the end of the raceway in the Lancaster machine, you say in answer to Int.
23 29, "A yielding spring such as I have just mentioned, substantially, is shown on the end of the button-feed trough in the Morley patent, and there performs substantially the same functions as the yielding spring on the end of the raceway of the Lancaster machine;" please designate by letter or number said spring to which you therein referred.

Ans. The spring to which I referred in that answer is numbered 68, in Fig. 20.

Cross-int. 32. What parts or pieces, stating them specifically by letters, are there between the yielding spring 68 of the Morley patent and the stitching mechanism which aid in transferring the button from the pressure of the yielding spring 68 to the stitching mechanism?

Ans. The button carrier 7 is used in the modified construction

shown in Fig. 20 as it is used in the construction of the other figures; that part, therefore, and its operating mechanism heretofore described are parts which operate with others to transfer buttons from the end of the button-feed trough to the sewing devices. In addition to said button carrier there is a head on that piece numbered 64, a pin, 66, passing through said head, a spring, 65, and an abutment, 67, against which said pin is driven.

Cross-int. 33. Is the yielding spring of the Morley patent which you have referred to as present in the Lancaster machine the same yielding spring as that represented in the Matheson patent and lettered therein *w*?

Ans. The spring 68 in the Morley patent is a yielding spring; the Matheson patent says that a yielding spring, *w*, is provided on the lower end of the raceway. In the Morley patent the spring 68 prevents the line of buttons in the trough from sliding out of it. The Matheson patent says that the spring *w* bears against the lower buttons and constitutes a yielding stop, holding each button therein in succession until said button is withdrawn from the raceway. That is substantially what the spring 68 does in the Morley patent—the spring 68 holds the line of buttons up in the trough until it is sprung aside to deliver a button; the spring *w* in the Matheson patents holds the button in the raceway until it is engaged by the needle, when the raceway moves away from the latter,
24 thereby delivering the button or letting it slide by the spring *w*. Relative to the yielding spring on the end of the raceway in the Lancaster machine, that spring was on the machine which I saw operating—meaning the equivalent of the spring *w* in the Matheson patent.

Cross-int. 34. What mechanism is referred to in the first claim of the Morley patent by "feeding mechanism," and what mechanism is referred to in the eighth claim of the Morley patent by the words "feeding appliances;" is it not in both instances a contrivance or series of contrivances whose object is to move the cloth or fabric to which the buttons are attached the proper distance for stitching the buttons?

Ans. The words "feeding mechanism," in the fifth line of the first claim of the Morley patent, I take to mean the mechanism for feeding the fabric along for making stitches of the proper length, without regard to any particular form of stitch—that is to say, not having regard to stitches of any particular length.

The words in claim 8 of the Morley patent, "feeding appliances and operating mechanism, whereby the feeding devices are moved alternately different distances to alternate short button stitches, with long stitches between the buttons," refer to mechanism for producing a series of stitches of different lengths, as is required in button-sewing machines.

The mechanism mentioned in the quotation from claim 8 refers to feeding mechanism which permits of attaching a button by short stitches to a spot on the fabric, and then makes a long move to bring another spot on the fabric to the sewing devices where the next button is to be attached, thus making short and long stitches.

Cross-int. 35. Do you mean that the words "feeding mechanism" in the first claim refer to only a part of the feeding mechanism which you find described in the drawings and specification of the Morley patent; and, if so, what additional parts or mechanism are described in the quotation from the eighth claim in your last answer?

Ans. The feeding mechanism referred to in the first claim refers to such mechanism as will feed the fabric alternately the same distances, whilst the feeding mechanism which I referred to in my quotation from the eighth claim of the Morley patent refers
25 to such mechanism as will feed the fabric alternately short and long distances.

Cross-int. 36. Please give the main parts of the mechanism described in the two quotations from the first and eighth claims, respectively, given in your answer to Int. 34, designating the parts by letter or number.

Ans. In the Morley patent the needle-bar frame *o* is pivoted in the frame of the machine to have a lateral vibratory motion and produce what is termed, in sewing-machine parlance, a needle feed. Said needle-bar frame is provided with adjustable bearing points, *s s'*, against which cams *n n'* strike when said cams revolve. The said bearing points can be adjusted by the screws *v v'*, so that the said cams will vibrate the needle-bar frame regularly or irregularly.

(Adjourned.)

JULY 18, A. D. 1883.

Cross-examination resumed:

Cross-int. 37. Is not the stitching mechanism of the Lancaster machine and the stitch made by it a very different stitching mechanism from that described in the Morley patent in this respect, that it uses only one thread instead of two; that the knotting of the thread around itself below the shank of the button is not shown by Morley? And is it not true that it requires much less thread than the Morley machine, and fastens the buttons fully as well?

Ans. The stitching or sewing mechanism of the Lancaster machine and that shown and described in the Morley patent are different, the stitch formed by the latter being made by the employment of two threads, while that of the former is made by the employment of one thread; and the form of stitch by the two mechanisms is different, the buttons in the case of the Morley stitch being secured to the fabric by threads which pass through the shank of the button and under the fabric, while in the case of the stitch of the Lancaster machine the threads pass through the shank of the button under the fabric, and, in addition thereto, a loop thereof passes around the shank of the button above the fabric. The thread in the
26 stitch of the Lancaster machine is located in a single line under the fabric, while that in the stitch of the Morley machine forms two separated lines under the fabric. In the case of a stitch leaving a single line of thread like that made by the Lancaster machine, as compared with that of the Morley machine, leaving

two separated lines under the fabric, it is evident that the latter stitch has a broader bearing upon the fabric than the former, and is less likely to tear through the fabric when the button is subjected to considerable strain. Probably more thread is used in making the Morley stitch than in making the Lancaster machine stitch, although, never having measured the thread composing the two different stitches, I cannot state positively as to that.

Cross-int. 38. Is there not in the Morley stitch a cross-line of thread between each two buttons extending between and at right angles to the two separate lines of the thread which you mentioned in your last answer?

Ans. I quote from the specification of the Morley patent in answer to said question: "In operating the machine to sew on buttons the operator places the leather between the presser foot and needle plate, as heretofore described, and makes a stitch through it before sewing through the shank of the button, this stitch being for the purpose of locking the end of the thread in the leather. The machine now feeds for a short stitch, the button being placed upon the leather as just described, and the eyed needle passes up through the shank of the button, and the hooked needle, passing up outside the button shank and operating as aforesaid, engages with the loop above the button shank. The machine now feeds the distance required between the buttons, after which the stitch is completed, as aforesaid, and in this case a double thread is drawn over the button shank, fastening it there firmly." The stitch mentioned above as made before sewing through the shank of the button I believe extends in a direction at right angles to the two separated lines of thread of the stitch.

Cross-int. 39. Then, if there are two separated lines of thread extending along on the under side of the fabric with a line at right angles thereto, as stated in your last two answers, would not the quantity of thread used in the Morley stitch be necessarily considerably more than in the Lancaster machine?

27 Ans. I stated in my answer to Int. 37 probably more thread would be used in making the Morley stitch.

Cross-int. 40. Was it not true, with regard to the Lancaster machine, that an attachment on the end of the feed trough was used to draw a loop of the thread in the operation of the machine at each stitch, while no such use on the feed trough is made in the machine of the Morley patent?

Ans. I did not have the privilege of operating the Lancaster machine myself, and cannot say as to the correctness of that part of the question which refers to that machine. The feed trough of the machine described and shown in the Morley patent does not act in forming a loop.

Cross-int. 41. Please examine the Matheson patent, which you said substantially described the Lancaster machine, and state if you there find any attachment on the feed trough or raceway shown and described therein performing the function inquired of in Int. 40.

Ans. In the operation described in the said Matheson patent I do not find any attachment mentioned as being on the feed trough or

raceway which is used to draw a loop of the thread, as mentioned in Int. 40.

Cross-int. 42. Do you find any attachment or mechanism shown or described in said Matheson patent "to draw up a loop of the thread in the operation of the machine at each stitch?" If so, please designate it by letter or number.

Ans. In the Matheson patent it is said that the model is raised and draws a primary loop, *c'*, through the eye of the button; that the cast-off afterwards casts off that loop from the needle, and that the needle afterwards draws up a secondary loop, *d'*, through the first loop, and that when the needle rises to draw up the said secondary loop it tightens the primary loop.

Cross-int. 43. In said patent to Matheson do you find shown and described any attachment or mechanism for seizing the secondary loop mentioned in your last answer and carrying it over the button? If so, please designate the same by letter or number.

Ans. I find in Figs. 14 and 15 of the Matheson patent two elements, each of which is lettered *d'*, which are designated in said patent as loop spreaders; and it is said that these spreaders
28 enter the loop as soon as the loop is released from the hook needle, and that "the forward swinging movement of the spreaders, after the hooks enter the loop (meaning the hooks *f' f'* on the spreaders), is sufficient to deflect or bend the loops away from the needle. The spreaders then commence to recede from the needle, and at the same time are separated at their hooked ends, thus spreading the loop into a triangular form and carrying it over the head of the button, as shown in Figs. 1 and 10."

Cross-int. 44. Were there any such loop spreaders on the Lancaster machine?

Ans. There were.

Cross-int. 45. Are there any such loop spreaders, or their equivalents, shown or described in the Morley patent?

Ans. No such loop spreaders are shown or described in the Morley patent; and, since the stitch made by the Morley patent does not include the looping of the thread over the shank of the button, no mechanism for doing that is found in that patent.

Cross-int. 46. Is there any way suggested in the Morley patent of presenting the buttons from the feed trough to the needle of the stitching mechanism that does not involve the use of the button carrier 7, which has a reciprocating rotary motion, and certain flexible or spring arms on the end of the button carrier 7, marked in the Morley patent "*x x*," or numbered 65; and, if so, what is it? And please read from the patent the description which dispenses with the use of the button carrier 7.

Ans. No other way is suggested in the Morley patent of presenting the buttons from the feed trough to the needle of the stitching mechanism than the means mentioned in the question, I believe, other than what is contained in the matter which I quoted from the specification of said patent in my answer to cross-int. 38.

Cross-int. 47. You have referred in answer to cross-int. 36 to the means employed in the Morley patent for adjusting the length of

the stitch by means of the adjustable bearing points *s s'*, the adjusting screws *v v'*, and the cams *n n'*, which strike the bearing points in their revolution, and so vibrate the needle-bar frame. Do you understand that this combination of adjustable bearing points,
29 adjusting screws, and revolving cams, which drive, by engagement with the bearing points, the needle-bar frame to and fro, is and has been for many years the usual way of operating a needle-feed in wax-thread sewing machines?

Ans. I am aware that oscillating needle bars and means for supporting them have been for many years elements of what is called a needle-feed sewing machine. I am not able from memory to say that I can designate any particular machine or patent which shows the combination of devices alluded to in the question other than the Morley patent.

Cross-int. 48. In the Lancaster machine, as you saw it operated, a thread was passed through the eye of the button while the button was still in the button raceway, was it not?

Ans. If I recollect right, it was.

Cross-int. 49. The movement of the raceway laterally away from the needle caused a tension upon the thread which eventually pulled the button out of the raceway past the yielding spring, did it not?

Ans. I believe I have stated in some former answer that I thought that the raceway of the Lancaster machine moved away from the needle while the latter was through the eye of the button. The button was either so held when the raceway moved from the needle or it was held from moving with the raceway by the loop of thread which was first drawn up through the eye of the button. I find now, by referring to notes which I made at the time I saw the machine operate, that in that machine, when the needle had drawn the thread through the eye of a button, the raceway and hopper moved back a little, causing the button to slip by the spring on the end of the raceway and to be drawn out of it. In this manner of operation the button was held indirectly instead of directly by the needle, since the loop was held by the latter and by the fabric and other devices under it.

Cross-int. 50. Suppose you were to attempt to organize into a machine which takes the Matheson stitch as taken by the Lancaster machine a feed trough like that in the Morley patent without the button carrier and its arms *x x* or 65, would the buttons be so presented to the stitching mechanism that any stitch would be taken through the eye of the button?

30 Ans. The feed trough as shown in the Morley patent and there constructed is not adapted, without slight modifications, to supply buttons to the sewing devices of the Lancaster machine. The said modification would consist mainly in letting the shanks of the buttons project outside of the raceway, and in giving the lower end of the raceway a quarter turn to bring the buttons to such a position that the needle would pass through the eye of each one. Such a modification provides for dispensing with the said button carrier and its arms *x x* or 65.

Cross-int. 51. In the eighth claim of the Morley patent I find employed the words "short button stitches;" do you understand that those words refer to the stitches which pass through the eye of the button?

Ans. I understand those words to refer to such stitches as may be required to secure the button to the fabric before the long stitch is taken to bring the fabric to such a position as to take the next button.

Cross-int. 52. And in the machine described in the Morley patent, does the thread which makes these short button stitches pass through the eye of the button or not?

Ans. In a former answer to cross-int. 38 I quoted from the specification of the Morley patent which described the manner of making the Morley stitch. I now refer again to that quotation.

Cross-int. 53. Am I to understand that the thread which makes the short button stitches referred to in the eighth claim of the Morley patent does go through the eye of the button or don't go through the eye of the button, or that the thread provided by one needle for this short button stitch does go through the eye of the button, while the thread provided by the other needle does not go through the eye of the button, or that you don't know which it is, or that you do know and won't tell me?

Ans. The matter quoted by me in answer to cross-int. 38 is a part of the description given in the Morley patent of the operation of the machine then shown in sewing buttons on fabrics. In that quotation it is said that the operator makes a stitch through the leather before sewing through the shank of the button, and that after making that stitch the machine then feeds for a short
31 stitch; after that short feed, I understand that the loop of the thread is passed through the eye of the button, and is drawn over one of its shanks and down through the leather or fabric, and that after the loop is so drawn up or secured that the fabric is then fed for the long stitch, and that the aforesaid operations are repeated.

HENRY A. CHAPIN.

Attest: HENRY HYDE SMITH,
Special Examiner.

Evidence for Defendant.

Taken pursuant to the sixty-seventh rule of the Supreme Court of the United States, in equity, as amended, before me, Freedom Hutchinson, special examiner.

BOSTON, MASS., *Aug.* 15, 1883.

Present: Ambrose Eastman, Esq., of counsel for complainants; George E. Smith, Esq., of counsel for defendant.

Deposition of Samuel F. Crosman.

Direct examination by GEORGE E. SMITH, Esq., of counsel for defendant:

Int. 1. What is your name, age, residence, and occupation?

Ans. Samuel F. Crosman; fifty-eight years old; I reside at Swampscott, in the county of Essex and Commonwealth of Massachusetts; I am engaged in fitting the uppers for boots and shoes.

Int. 2. Where and for how long a time have you carried on your present business?

Ans. I have been engaged in that business in Lynn, in this State, since 1869.

Int. 3. Please state more particularly what the nature of your business is.

32 Ans. I receive the uppers of boots and shoes from the cutters and return them ready for lasting.

Int. 4. State whether or not this work upon shoe uppers is performed on stock of your own or whether you do the work for the manufacturers of shoes.

Ans. I do the work for the manufacturers.

Int. 5. How many operatives do you employ in said business?

Ans. From twenty-five to one hundred and fifty.

Int. 6. State whether or not the work above mentioned by you on shoe uppers includes the making of the button-holes and sewing on the buttons of button boots.

Ans. It does.

Int. 7. State whether or not you use machinery in performing the work on shoe uppers above mentioned.

Ans. I do.

Int. 8. State whether or not you are acquainted with the new and improved machinery in use in said Lynn within the last ten years for the manufacture of shoes.

Ans. As far as my part of the business goes, I intend to keep posted with all the machinery in use.

Int. 9. State whether or not you have ever had any machine in use in your shop in said Lynn for sewing buttons on boot uppers.

Ans. I have.

Int. 10. Can you state when that was?

Ans. I think it was in the fall of 1873.

Int. 11. How long did you have it there?

Ans. I think I experimented on it at times about five or six weeks.

Int. 12. Please describe that machine as near as you can, giving its size, shape, and particularly the apparatus used in sewing on the buttons and feeding them to the needle.

Ans. I don't know as I can describe the size very well; it is set on a common sewing-machine table; it was run by foot power. The part of the machine that fed the buttons to the boots was the old Monitor Raceway, such as they use for feeding eyelets for boots. In this machine they use the needle the same as the McKay folks used.

As nearly as I can recollect, the machine fed down automati-
33 cally to the needle as the eyelet machine did; as the needle passed down, as near as I can recollect, it went through the eye of the button; as the needle came up it brought up a loop, and I think the needle went down on the outside of the button the second time and brought up a second loop, and either the first or sec-

ond loop was passed over the button by some automatic arrangement. I don't know but I should say that it did not always pass the loop over. We moved the boot along by hand from one button to another.

Int. 13. You speak in your last answer of the McKay needle. Please describe it more fully and state if there is any other name by which it is known or called.

Ans. There are different sized needles that are termed shank needles. It is the McKay or wax-thread needle with a hook.

Int. 14. Please state when the needle first passed through the eye of the button, whether before or after the button left the raceway which you have described.

Ans. The button left the raceway after the needle passed down. I say the needle would pass down through the button before it left the raceway.

Int. 15. Can you describe the apparatus in that machine for throwing the first or second loop over the button as you mentioned in your answer to Int. 12?

Ans. I cannot.

Int. 16. Can you partially describe it or give us an idea how it operated?

Ans. I think it was similar to one in a wax-thread machine. It is called a thread guide or a half circle—passing halfway round and back.

Int. 17. State whether or not the old Monitor raceway and the McKay or wax-thread needle and its operating mechanism were in use prior to the time when you say you had this machine for sewing on buttons in your shop.

Ans. I think they were, both of them.

Int. 18. How rapidly and well did that machine sew on buttons?

Ans. About as fast as a girl could sew on by hand. I think there was no difficulty about the quality.

34 Int. 19. From whom did you receive said machine?

Ans. From Amos L. Wood, of Boston.

Int. 20. Do you know whether he now lives in Boston?

Ans. I think he does.

Int. 21. Do you know who made or invented the machine?

Ans. I do not, except from hearsay.

Int. 22. By what name, if any, have you heard said machine called?

(Objected to by counsel for plaintiffs.)

Ans. I have heard it called the Keith invention.

Int. 23. Do you know where that machine is?

Ans. I do not.

Int. 24. When did you last see it?

Ans. Not since it was removed from my factory.

Int. 25. Who took it away?

Ans. I can't tell you; the party that put it in took it way.

Cross-examination by AMBROSE EASTMAN, Esq., of counsel for complainants:

Cross-int. 26. Whose shop was it in which you saw that machine operate?

Ans. In the shop of Keene Brothers.

Cross-int. 27. In what capacity were you employed there?

Ans. As fitting boot and shoe uppers.

Cross-int. 28. How long was the machine in that shop and under your inspection?

Ans. As nearly as I can recollect, about five or six weeks.

Cross-int. 29. Did you have charge of the machine and operate it; or, if not, who was the operator?

Ans. I did not. I can't tell you the operator.

Cross-int. 30. What occasion did you have to inspect critically the machine and its working?

Ans. I examined it pretty thoroughly to know whether there was going to be any profit in running it over and above sewing on by hand.

Cross-int. 31. Did you employ the operator or was she under your direction?

35 Ans. I employed the operator, but she was under his (Amos L. Wood's) direction or his man's.

Cross-int. 32. Was the machine operating during the whole five or six weeks it was in the shop?

Ans. I think not. I can't tell how long it was in operation; long enough so that I decided that it would not pay me to run it.

Cross-int. 33. What portion of the time, according to your best recollection, was the machine actually running?

Ans. Probably half of the time.

Cross-int. 34. What caused the interruptions?

Ans. The bother of having the machine and sewing buttons by hand at the same time, because I couldn't depend upon getting out a case of boots as regularly as I could when we were sewing them on by hand.

Cross-int. 35. Why couldn't you depend on the machine?

Ans. Because, it being a new machine and a new operator, it was slow and did not always throw the loop as it ought to; it was liable to break thread.

Cross-int. 36. Did not a considerable number of buttons fail to be sewed on properly by the machine?

Ans. I think not.

Cross-int. 37. When the needle failed to throw the loop as it ought, what was done?

Ans. We put it over with the fingers.

Cross-int. 38. Didn't this often happen?

Ans. I think it did.

Cross-int. 39. What mechanism fed the buttons from the raceway?

Ans. I think it was taken out by hand after the button being attached to the boot to give room for the next button.

Cross-int. 40. How was the cloth or leather fed along and how were the bottons spaced?

Ans. It was fed along by hand and the buttons were spaced by marking by hand.

Cross-int. 41. Was there a hopper at the head of the raceway?

Ans. I think there was.

36 Cross-int. 42. Did the buttons change their position at the foot of the raceway?

Ans. I think we had no difficulty in their coming down the raceway and taking their position to receive the needle.

Cross-int. 43. At what point did the operator handle the button in the process of sewing on?

Ans. I can't tell you.

Cross-int. 44. Did not the thread often break in operating the machine?

Ans. I think it did.

Cross-int. 45. What was done then?

Ans. We started anew, the same as commencing the boot—cut off the thread. The breaking did not, I think, loosen all the previous buttons.

Cross-int. 46. What was done to lock the loop to the leather or fabric of the boot?

Ans. I should say the loop went over the button, the thread going down through the material and then being drawn to the next button.

Cross-int. 47. There was no provision in this machine for feeding the fabric along automatically, but the leather or cloth was moved by hand and the spacing and the length of the stitch in passing from one button to another were wholly determined by the skill of the operator, were they not?

Ans. I think they were.

Cross-int. 48. When was your attention called to the facts relating to this machine since it left Keene Bros.' shop?

Ans. I can't tell you the time; it has been talked over ever since we had the machines there recently. It has been talked over that there was such a machine in the market.

Cross-int. 49. After the machine left Keene Bros.' shop, when did you first hear of a button-sewing machine being on the market?

Ans. 49. About a year ago I first heard of it.

Cross-int. 50. Until a year ago have you had occasion to recall anything about the old machine in Keene Bros.' shop?

Ans. I think not.

37 Cross-int. 51. You considered that machine a practical failure, did you not?

Ans. I did, for me.

Cross-int. 52. Have you ever seen a duplicate machine, or one operating like that which you have described, in Keene Bros.' shop?

Ans. I have not.

Cross-int. 53. Do you know anything of the history of that machine during the ten years since you last saw it in 1873?

Ans. I do not.

Direct examination resumed:

Int. 54. Referring to cross-int. 26, do you mean the machine was under the care or charge of Keene Bros.?

Ans. Nothing to do with them in any shape. I merely did their fitting by contract, same as I did for others.

Int. 55. Was your stitching or fitting room then in a building owned by or occupied by Keene Bros.?

Ans. It has always been leased by myself of Keene Bros. ever since I have been with them.

Int. 56. Were you then in the employ of Keene Bros.?

Ans. I had a contract to do their work. I was by myself entirely. I had nothing to do with them.

Int. 57. In answer to cross-int. 39, do you mean to be understood that the button was removed from the raceway by the hand of the operator?

Ans. The button, when removed, is attached to the boot, and you remove the boot to the next button.

Int. 58. Then, as I understood you, the button was sewed on by two stitches, as you have above described, and in the process of feeding along the boot to a position to sew on the next button the button already sewed on was pulled out of the raceway?

Ans. It was pulled out or drawn out.

Cross-examination resumed:

Cross-int. 59. Did two stitches always pass through the eye of the button, or a single thread?

Ans. I think it was a single thread.

38 Cross-int. 60. The second stitch, then, was only around the shank, if I understand you?

A. Yes.

Cross-int. 61. In your best recollection, how many cases of boots were eyed on this machine and how many pairs to a case?

Ans. I can give you no idea, because, if my memory serves me correctly, we used to do part of a case by hand and part by machine.

Cross-int. 62. The whole use of the machine in that shop was experimental only, was it not?

Ans. That is all.

SAMUEL F. CROSMAN.

Attest: FREEDOM HUTCHINSON,
Special Examiner.

BOSTON, MASS., *Sept.* 13, 1883.

Present: Ambrose Eastman, Esq., of counsel for complainants; Thomas W. Clarke and George E. Smith, Esqs., of counsel for defendant.

Deposition of Henry B. Renwick.

Direct examination by THOMAS W. CLARKE, Esq., of counsel for defendant:

Int. 1. Please state your name, age, residence, and occupation.

Ans. Henry B. Renwick; sixty-six years old; reside in city of New York; I am by profession a civil and mechanical engineer, and for the last nineteen years have been almost exclusively occupied in matters relating to patents and patent inventions, and have been examined as expert in patent cases frequently during each year for the last thirty years.

Int. 2. What experience and acquaintance have you had with mechanical contrivances employed in sewing machines and pin and screw machines, and with the examination and comparison of such mechanical contrivances with each other, and with the descriptions and drawings of such contrivances?

39 Ans. I first knew of sewing machines while principal examiner in the Patent Office in 1848. Since my resignation I have been in many suits relating to sewing machines; have examined many different kinds of sewing machines, and have drawn patents and reissues for them, and have several times had occasion to examine into the whole state of the art in relation thereto in books and in American and foreign patents. I have also been familiar with several sewing-machine factories. My acquaintance with pin and wood screw machinery commenced about the same time, and I have been engaged in several suits involving both those kinds of machinery. I have drawn patents for screw machinery, and have had occasion several times to examine the whole state of the art in relation to the making of pins and screws.

Int. 3. Have you examined and do you understand letters patent to James H. Morley *et als.*, dated Jan. 4, 1881, No. 236,350, and the mechanical contrivances and combinations therein shown and described, and referred to in the claims thereof?

Ans. I have carefully examined the patent named in the question, my examination extending over large parts of several days. I believe I understand the machine therein described and the various contrivances and combinations set forth in the claims thereof.

Int. 4. Have you examined and do you understand the machine in use by the defendant in this case, being the machine described in the Mathison letters patent, dated Nov. 28, 1882, and No. 268,369, and the mechanical contrivances and combinations embodied therein?

Ans. I have examined the machine made in exact accordance with the Mathison patent, and have examined the patent itself carefully, and believe I understand the construction of the machine in all its parts.

Int. 5. If you have a specimen of such a machine will you please produce it to be marked as an exhibit in this case?

Ans. I have a specimen and now produce it.

(Offered in evidence and marked "Defendant's Exhibit Lancaster Machine.")

Int. 6. Please compare the contrivances and combinations contained in the said Lancaster machine with the contrivances
40 and combinations described in the Morley patent and referred to in the claims thereof, stating their resemblances and differences and the resemblances and differences of the results produced by such contrivances and combinations, and say what, if any, substantial resemblances and differences there are between them, giving your reasons for any opinion you may express.

Ans. Both machines contain three main groups of instrumentalities, which, when combined together, make up the machine.

These are, first, mechanism for holding the buttons in mass and delivering them separately in proper position over the leather, to be attached thereto by the sewing and stitching mechanism.

Second, the stitching mechanism; and, third, the mechanism for feeding the leather along so as to space the stitches, and consequently the buttons when sewed on.

In both machines there is a hopper containing the button much like those used in pin, screw blank, metallic cartridge shell, and eyeleting machinery.

In the Morley machine there is on the bottom of this hopper what is called in the patent a hopper valve, which hopper valve picks out the buttons from the hopper, one by one, and delivers them into an inclined trough.

This trough is substantially identical with the ways, as they are called, used in pin and screw-blank machinery, such troughs holding the blanks by their heads, while the body of the blank rests in a longitudinal slot or deep groove in the bottom of the trough.

The buttons enter the upper part of this trough, which has no groove in it, with their shanks in all directions, and it becomes necessary to turn them over, so that the eyes will lie in the slot or groove, while the bodies of the buttons occupy the trough. In screw-blank and pin machinery, the body of the blank being heaviest, naturally falls down into the groove, so that the screws or pins hang by their heads.

The case is different with a button, and therefore there has been introduced into this Morley machine what may be called an arrranging contrivance, which turns the buttons over, or some of them, thereby causing all or nearly all of the buttons to lie with their shanks in the groove of the trough. This contrivance is described
41 on pages 3 and 4 of the printed copy of the patent, commencing at line 128 of the third page: It consists of a flexible corrugated strip of metal, lying over the top of the trough, and represented in Fig. 1 of the drawing, said strip being oscillated by proper machinery, its purpose being to roll the buttons over so that

their shank will lie in the deep groove at the bottom of the trough, shown in Fig. 3 of the drawing.

After the buttons are arranged they slide down the trough, being aided in so sliding by a jarring motion imparted to the trough, and they finally arrive at the lower end of the trough (which at its lower end is bent so as to be nearly vertical), occupying position therein as shown in Figs. 20 and 23, on sheet 6, of the drawings, and it will be noticed that the buttons lie with their heads towards the front of the machine—*i. e.*, the side farthest from the driving pulley—and that in one modification of the machine they are held in the trough by the button wheel shown in Fig. 18, sheet 6, of the drawing, this button wheel being mounted on a vertical axis and lying in relation to the end of the trough as shown in Fig. 13, sheet 5.

This button wheel is provided with pockets, each capable of receiving a button, as shown in Fig. 18, sheet 6, and is capable of being intermittingly revolved at proper times. Its offices are—

First, to close the bottom of the trough;

Second, to receive buttons into its pockets; and

Third, to turn the buttons round so that their shanks or eyes lie towards the front of the machine, effecting this latter purpose by its own revolution.

In order to prevent the buttons falling out of these pockets, the button wheel rests upon a stationary table, which closes all the bottoms of the pockets except one. When a button arrives over the notch in the table it has been turned round on a vertical axis one hundred and eighty degrees, but as a plane passing through its eye is then vertical the button must be turned on a horizontal axis through ninety degrees, so that its eye may lie flat, in order that the needle which ascends from beneath may pass through the eye of the button; therefore, when a button arrives over the notch in the table a plunger or punch, *h'*, Fig. 13, sheet 5, of the drawing, descends into the pocket and drives the button into a sort of
42 split-spring spoon, which lies at that time immediately under the notch and under the pocket into which the punch enters, as shown in Fig. 13, sheet 5. When the button is punched into the spoon a plane passing through the eye is still vertical, and the spoon therefore turns round on a horizontal axis ninety degrees to bring the button eye into such a position that it can be entered by the needle, and as the spoon turns it retracts, so as to bring the eye of the button into proper position to be entered by the needle, as shown in Fig. 14, sheet 5, while the button lies in such a position that a plane passing through its eye is horizontal.

These various contrivances, as will appear from an inspection of the patent, especially commencing at line 28 of page 5 and ending at line 115 of the same page, constitute the button-feeding devices "or button-feeding mechanism" of the claims of the patent.

And the button wheel, the punch, and the split-spring spoon, operating as I have described, are the "appliances for bringing the buttons successively to positions to permit the needle to pass through the eye of each button" referred to in the second claim of the Morley patent.

The Morley patent describes a modified form of these contrivances for bringing the button successively to position to be entered by the eye-pointed needle, which is shown in Figs. 20, 21, 22, and 23, sheet 6. As I understand it, the devices shown in these figures cannot be used unless the machine is somewhat modified from that shown in the drawing, and I have not been able to understand from the patent what these modifications are.

In these modifications the button wheel is dispensed with and a light spring, shown best in Fig. 23, is applied to the bottom of the trough to do the duty of the wheel—holding the column of buttons up. This spring is really a spring gate, which is opened at proper intervals by proper mechanism and shuts itself. This mechanism, which also receives the button, turns it around ninety degrees on a horizontal axis and transfers it to the place where it is to be sewed, is a sort of spring nippers, one of the jaws of which is split so as to receive the shank of the button, and its offices are—

First, to open the gate;

Second, to receive the button;

43 Third, to clamp the button;

Fourth, to turn it over through ninety degrees; and

Fifth, to transfer the button to the place where it is to be sewed on; and this spring nippers, operating as described, may, in my opinion, be fairly included in the words before quoted from the second claim, namely, "appliances for bringing the buttons successively to positions," etc.

Now, turning to the defendant's Lancaster machine, it will appear that it also has an inclined surface, which, in connection with a slotted cover, supports a column of buttons. In the Morley machine the buttons are bodies up and shanks down. In the Lancaster machine the buttons are shanks up and bodies down, the inventor having discovered that buttons differ from pins and screw blanks, and that it is much easier to operate with the former with the shanks upward, the tendency of the button being to lie shank up in some cases, and in some cases with both shank and body resting upon the supporting surface.

In the Lancaster machine the buttons are thrown into a hopper provided with a reciprocating brush, which sweeps over the button of the hopper, and rolling the buttons over so that those which lie bodies down and shank up enter with their shanks up into certain slits in a metal plate, which covers an inclined flat surface, and the machine has no button hopper like that of Morley, and has a sweep brush which is not described in the Morley patent or needed in the Morley contrivance. These slits all converge into a single slit, and, consequently, the buttons slide down the numerous slits and lie in a single column, shanks up, upon an inclined-plane surface. This single slit and a plane surface which it covers are twisted at the end of the contrivance in such manner that a plane passing through the slit is nearly horizontal, and the surface which is in contact with the button head is nearly vertical. Consequently, when the buttons reach the bottom of the contrivance they lie in such position that a plane passing through the eye of the last button is horizontal or

nearly so. The column of buttons is held up by a light spring, and this spring gate is opened by the button itself, and not by any extraneous mechanism, owing to the fact that the contrivance holding the column of buttons is forced to vibrate, and that a thread passing through the eye of the lowest button prevents that button from vibrating with the contrivance, the button, therefore, being pulled out, and in pulling out overcoming the resistance of the spring.

The contrivance has, as I have before said, a peculiar kind of vibrating motion, which I will hereafter describe fully, saying at present only that the eye of the lowest button in the column lies directly under the needle, so that the needle may and does enter the eye of the button while it is still in the column. The contrivance containing the column then vibrates sideways, so as to get out of the way of the needle in a subsequent feeding operation, which will be described hereafter.

It will be seen from this description of the Lancaster machine that it has in it no hopper valve and no equivalent therefor; that it has no corrugated plate, or equivalent therefor, for turning the buttons over in the trough; that it has no button wheel for performing the duties which I have described that it performs in the Morley patent; neither has it a table nor a punch nor a spring-split spoon, nor the modification of those contrivances described in the Morley patent; neither has it any apparatus of any kind which performs the offices of any of those parts, because, owing to the peculiar construction and motion of the lower end of the Lancaster button-feeding mechanism, all those parts of the Morley button-feeding mechanism can be and are dispensed with. Both contrivances, as I have said before, have a hopper, and both contrivances have what may perhaps be called a trough, although the so-called trough of the Lancaster machine is really not a trough, but a flat surface provided with a slotted top, and operating in precisely an opposite manner to the Morley trough, because the latter is contrived to hold the button shank down, while the Lancaster trough, if it may be so called, is contrived for the express purpose of holding the shank up. In the modified form of the Morley contrivance there is a spring gate for holding the buttons up; in the Lancaster machine there is a similar spring, this spring or its equivalent being common in screw-blank and eyelet machinery for the purpose of holding up a column of blanks and permitting them to be removed, one by one; but in the Morley machine this spring gate is opened by a special contrivance, so as to permit the buttons to drop, while in the Lancaster the button itself, as before described, opens the spring when the lower end of the button-holding contrivance is removed sideways.

In both the Morley and Lancaster machines there is a contrivance for feeding the leather so as to space the stitches and, consequently, to space the button, which is called in the claims of the Morley patent feeding mechanism and in the eighth claim feeding devices. Both machines feed by means of the needles—that is, the needles while inserted in the cloth move in the direction of the feed, carrying the cloth or leather along with them, and in both machines this

motion of the needle or feed is derived from revolving cams. This kind of feed was common in machines for sewing leather long prior to the date of the Morley patent, and I find no substantial difference between the leather-feeding mechanism of the two machines, although in the Morley the two needles swing like an inverted pendulum, while in the Lancaster the single needle reciprocates in a straight line.

Turning now to the sewing or stitching mechanism, I observe—

First. That the Morley patent, in the preamble thereof, states as follows: "The objects of my invention are to form a double-threaded stitch on the top side of the material being sewed upon transversely to the direction of feed and on the reverse side of the material two parallel lines of stitches at right angles to the first-named ones."

This stitch, which it is one of the objects of his invention to form, and the mechanism for making it, is fully described in the remainder of the specification.

There is, in my opinion, an error in this statement, which is, however, of no consequence, in calling the stitch a double-threaded stitch, because it clearly appears from the patent as a whole that the stitch made by the machine described in the patent is a single-thread stitch, a stitch formed of one thread only and not of two, as in what are commonly called lock-stitch machines.

In sewing buttons on shoes it is evident that no longitudinal stitches, or certainly no prominent longitudinal stitches, should appear on that side of the leather to which the buttons are applied, and the stitch as a whole, specially described in the Morley
46 patent, has no longitudinal seaming on the button side of the leather. I produce a strip of wood showing two kinds of stitches for sewing buttons on fabrics. On that part of it marked "A A" the Morley stitch is represented, and it will be seen that on the button side there are two transverse stitches, each composed of two parts of the same thread for each button, while on the other side of the strip of wood, which represents the leather, there are two parallel lines of stitches at right angles to those on the button side, one row of these longitudinal stitches being composed of single parts of the same thread, while the other row of longitudinal stitches is composed of two parts of the same thread, so that there are in all three longitudinal lines of thread on the side of the fabric farthest from the button.

Examination of this stitch as a whole will show that only one thread is used in making it, and that it is, in reality, a peculiar kind of chain stitch, formed by drawing bights of thread through loops of the same thread. This stitch is described as being made, in the patent, by means of two needles, one eye pointed like the Howe needle, and the other a hooked or crochet needle, such as is used in leather-sewing machines.

These needles are set at an inclination to each other across the line of seam and enter the cloth from beneath, and when they get above the cloth cross each other, as is shown in Fig. 1, sheet 1, and Fig. 17, sheet 5, of the Morley patent.

In sewing the eye-pointed needle punches the cloth and carries a

bight of thread up above it, then retreats a little to form a loop—that is, to cause the thread to expand away from the needle. During this time the hooked needle has also perforated the cloth from beneath, and, when the loop is formed, passes between the eye-pointed needle and the thread, and as both needles descend the hook catches the thread supplied by the eye-pointed needle and carries a bight of thread across the cloth and down through it to the under side, thus forming the transverse stitches on the button side of the cloth, which it was one of the objects of Morley's invention to make, and it is clear that if either of these needles had passed through a button eye after passing through the cloth that then the button would be held onto the cloth after the descent of the needle by this transverse stitch, and the patent, although it specially
47 describes the eye-pointed needle as passing through the eye of the button, states that the hook needle may pass through the eye of the button, but the same stitch precisely would be formed in either case.

This stitch may be further explained by reference to the strip of wood before referred to.

In making it the eye-pointed needle carrying the thread ascends through the hole 2 and the hook needle through hole 1. After the eye-pointed needle has retreated a little, the hook needle seizes the loop from the eye-pointed needle, both needles descend, the eye-pointed needle sliding down on a single part of the thread, while the hook needle carries down a bight of the thread, forming the loop 1, 3 on the lower side of the leather. After leaving the holes 1, 2 the needles move along under the cloth until they come opposite the holes 3, 4. They then ascend, puncturing these holes, the eye-pointed needle carrying a bight of thread with it and the hook needle sliding up through the loop 3, 1 on the lower side of the cloth and leaving it there.

As the needles rise either one or the other of them passes through the eye of the button, which is held in the split spoon, and, as they continue to rise, the hook needle passes between the eye-pointed needle and its thread and seizes its loop; both needles then descend as before, the hook needle pulling down the loop 5, 3 on the under side of the leather and, at the same time, pulling 5, 3 through the loop 3, 1. The needles then move along the leather, the hook needle forming the bight 5, 3 and the eye-pointed needle forming the line of thread 6, 4. The needles then rise again at 5, 6, the hook needle leaving the loop 5, 3 on the lower side of the leather and a continuation of those motions forms the seam referred to in the preamble above referred to.

There are accessories necessary to the making of this seam—the take-up apparatus and what is called in the patent the cast-off—which latter serves to cause the hook needle to draw a loop from above the leather through the loop which is held below the leather, and the patent, moreover, describes modifications of the stitch and stitching mechanism on lines 65 to 73 of page 6 of the patent.

The first of these is that I have already referred to, which
48 consists in passing the hook needle through the eye of the

button instead of the eye-pointed needle, and the same stitch will be formed whether the eye-pointed needle or hook needle passes through the eye of the button, namely, the single-thread seam, all the stitches of which on the button side of the leather are transverse and all the stitches on the reverse side are parallel to the line of seam.

The other modifications of stitching apparatus described in the patent would not make this stitch, but would either make the common lock stitch made by the shuttle machine or the Grover & Baker stitch. In the second modification the hook needle would go upwards through the cloth and through the eye of the button (I may here say that the word "form," on the 66th line of the 6th page, is evidently a misprint, and should be "from"), and then seize a thread held on the top of the cloth by a suitable carrier, and draw a loop of that thread down through the cloth; this loop of thread below the cloth is then to be secured by passing a second thread through it, this second thread being governed either by a shuttle or by a needle. If a shuttle were used the stitch would be the common lock stitch; if a needle were used the stitch would be the Grover & Baker stitch; and in making this stitch there would be three necessary instrumentalities, namely: first, the hook needle; next, the thread carrier above the cloth to carry thread to it; and, third, the needle or shuttle below the cloth. The third modification dispenses with the hook needle and uses only the eye-pointed needle for carrying the thread through the cloth and through the eye of the button.

When this eye-pointed needle retracts and forms a loop above the button eye a loop spreader is to be employed to spread that loop, and a shuttle, carrying either one thread or two threads, is to be passed through the loop, the eye-pointed needle in its retraction carrying, by means of its loop, the two threads furnished by the shuttle, and the stitch being the ordinary lock stitch, except that there are two threads on one side of the cloth (the threads which confine the button). This stitch requires three instrumentalities to make it, namely, the eye-pointed needle, operating from beneath, and the loop spreader and the shuttle, working above the leather. Neither of the last-named stitches would have transverse stitches on the button side of the leather, and both of them would have
49 longitudinal stitches on the button side of the leather, and neither of them could, in my opinion, be profitably employed in sewing on buttons, because no person would want a heavy line of thread reaching longitudinally from button to button on the upper side of the shoe, and both of them would be double and not single thread stitches.

(Defendant puts in as an exhibit the strip of wood with buttons attached, above referred to, and the same is marked "Def't's Exhibit Morley & Lancaster Stitches, F. H., Spec'l Ex.")

The special stitch described in the Morley patent as made by the eye-pointed and hook needles, both operating from the lower side of the material and making transverse stitches on the upper side and longitudinal stitches on the lower side of the material, is, I believe, an old stitch (by old I mean long prior to the date of the

Morley patent), used in a straw-sewing machine patented to Sidney S. Turner Dec. 3, 1872.

Turning, now, to the Lancaster machine and the stitching mechanism thereof, I would first remark that this machine makes an entirely new stitch—a stitch substantially different from any of those described in the Morley patent and requiring an entirely different mechanism to make it.

In the Lancaster machine the needle is on the upper side of the leather and descends through it; it is an ordinary crochet needle provided with a cast-off, both being the same as those described in the Morley patent and the same as those used for twenty-five or thirty years or more in sewing leather.

This machine is also provided with a thread carrier beneath the leather, like those used in such leather-sewing machines. The machine has no take-up and needs none. It may be well here to say that the eye of the button in the Lancaster machine really makes a part of the stitch, and that the stitch cannot be made unless a button is supplied to the machine at every alternate perforation of the needle, and it is therefore necessary that the machine should have some instrumentality or contrivance for carrying some of the loops of thread over the bodies of the buttons so that that loop may be locked by the eye of the button. The machine would go through its motions if the buttons were not there, but would only form a succession of loops which could be pulled out of the leather.

In the Exhibit Morley & Lancaster Stitches, on that end of it marked "B B," the stitch made by the Lancaster machine is represented.

In making this stitch the needle first passes down through the eye of the button, as at hole 1, carrying its hook below the leather; the thread guide or thread carrier beneath the leather then puts a loop of thread into this hook and the hook rises, pulling a loop of thread through the leather and through the eye of the button.

The needle then descends again, sliding through this loop and piercing the leather at hole "2" and leaving the loop on top of the leather; the thread carrier now again puts the thread into the hook of the needle and the needle rises again, carrying another bight of the thread through the leather and through the loop which leads from hole 1 to hole 2, thus locking this loop.

As the needle goes up, a very peculiar contrivance, represented on Figs. 13 to 17 of sheet 3 of the Mathison patent, and exhibited in the Lancaster machine, seizes both parts of the loop carried up through hole No. 2, opens it wide, and passes it over the body of the button.

This contrivance seizes the loop from the needle while it is ascending, and either the needle in its ascent through hole No. 3, or the thread guide, or both, pull one part of this loop which is over the button down through the leather and consequently round the shank of the button, thus locking the stitch.

When the needle descends through hole 3 it passes through the button eye and the cloth and pulls up a loop, as it did when operating through hole 1, and when it has passed through hole 4 and

ascends the loop it brings up is again passed over a button, the button eye again locking the loop which was drawn up through hole 4.

A succession of these operations forms the stitch and sews a row of buttons on the cloth, and the method of making the stitch is clearly shown on Figs. 7 to 12, on sheet 2 of the Mathison patent, the knot tied around the button being clearly shown in Figs. 11 and 12, and these figures also show how each alternate stitch of the loop is locked by the button itself. Observation of these figures will further show that if these buttons were removed from the
51 stitch there would remain a succession of loops and, consequently, no seam.

This stitch uses below the cloth less than one-third of the thread used in making the Morley stitch, and both stitches use about the same quantity of thread above the cloth, and the button is, in my opinion, better and more firmly secured by the stitch of the Lancaster machine, while, at the same time, the Lancaster machine is much more economical, as it uses less thread.

The results of the two machines, if considered generally—that is, to produce a row of buttons sewed on leather irrespective of the kind of seam by which they are attached—are the same, and the same as some old machines that I know of, one of which is a double-thread machine and makes a transverse stitch on the button side of the leather and a longitudinal stitch on the other side thereof.

But if the results be compared, not generally, but specifically and as including the concatenations of thread which will form the seam and attach the buttons to the leather, then the results are different.

SEPT. 14, 1883.

Present: As before.

Turning now to the Morley machine, I find I have omitted to state anything as to the manner in which the button is released from the split-spring spoon after its eye has been traversed by the needle.

I am unable to discover from the patent in what manner the release of the button is effected, but I am able to discover from the patent how the release of the button is effected from the spring nippers, it being pulled out from the nipper by the feed motion of the leather, but whether it is pulled out by the needle which is passed through its eye or the thread only, which has also passed through its eye, I am unable exactly to determine, being forced, in the absence of a model or machine, to derive my information from the Morley patent alone.

In speaking of the Lancaster machine, I have before stated that the lower end of the so-called trough therein vibrates away from the needle in order to get out of the road of the needle and comes back again in order to get a button eye beneath the needle, but this end of the so-called trough has other motions, as follows:

After the needle has passed through the button eye the end
52 of the so-called trough and the needle move together while the needle is making its feeding motion, and then stands still until

the needle has ascended, pulling a loop of thread through the eye and has again pierced the cloth. When the needle has got into the cloth the second time the button is pulled out of the end of the trough by the retreat of the trough towards the rear of the machine, and is so pulled out because at that time the leather is standing still and the button is held to it by the loop of thread which is passed through the eye of the button. After the button is thus pulled out of the end of the trough the trough stands still for a while, while a loop is passed over the body of the button, as before described, and the trough then returns again so as to hold the eye of a second button in the path of the descending needle.

In this Lancaster machine, therefore, the button is released, not by the motion of the leather, as in the Morley patent, but by the motion of the so-called trough, which carries the column of buttons.

Now, referring to the claims of the Morley patent, I find that the first claim is to the combination of the elements or contrivances, each element being composed of several sub-elements; or, as they have been sometimes termed, ingredients.

The elements covered by this claim are—

First, the button-feeding mechanism;

Second, in the terms of the claim, "appliances for passing the thread through the eye of the button and locking the loop to the fabric;" and,

Third, the mechanism for feeding the leather. The sub-elements which compose the button-feeding mechanism and which are, therefore, included in the claim are—

First, the hopper;

Second, the hopper valve;

Third, the trough;

Fourth, the elastic corrugated strip to roll the buttons in such manner that their eyes shall fall into the groove in the bottom of the trough;

Fifth, the button wheel and its supporting table;

Sixth, the punch for punching the button out of the button wheel into the spring-split spoon; and,

53 Seventh, the spring-split spoon; and these parts, when provided with proper machinery of some kind or other to cause them to operate in the manner described in the Morley patent, constitute the first element of the first claim, it being, however, clear that the spring nippers and spring gate at the bottom of the trough may be substituted for the button-wheel punch and spring-split spoon.

The second element of the claim is really the mechanism for making the stitch, when so set and operated, that it will pass a loop of thread through the eye of the button.

If the statement in the preamble is to be taken into account, this sewing mechanism must be limited to an eye-pointed needle and a hook needle acting in the manner described in the patent to make transverse stitches on the upper side of the leather and longitudinal stitches on the lower side.

But, if the statement in the preamble be ignored by the court, then the sewing mechanism of the claim will also include a shuttle carrying a second thread to lock the first one, or a needle operating below the leather to lock the loop of thread pulled out by an eye-pointed needle; and, under either construction of the claim, it will include as the second element at least two instrumentalities for making the stitch—one piercing the leather and carrying the loop through it, and the other to perform the locking, either a hook needle passing through the leather, or a shuttle or eye-pointed needle, both of which will lock the loops, but will not pass through the leather.

The third element of the claim, the leather-feeding mechanism, is composed either of one needle or two needles forced to swing by means of cams, while they are in the leather, so as to carry it along with them.

In speaking of the second element I have ignored, in speaking of the third modification referred to in the patent, the carrier which furnishes thread to the hook or crochet needle, and if this carrier is to be taken into account it will require in that modification three instrumentalities to make the stitch, namely:

First, the crochet or hook needle;

Second, the thread carrier; and,

Third, the shuttles or Grover & Baker needle to lock the loop of thread of the crochet needle.

54 Looking now at the Lancaster machine to see if it contains the invention referred to in this claim, I search to find whether it has the elements or sub-elements covered by this claim, or any equivalent or known substitutes for them, and, as I understand, I must find all these sub-elements in the Lancaster machine in order to assert that it contains the invention referred to in this claim. I cannot find all the elements nor the equivalents of them in the Lancaster machine.

Referring first to the button-feeding element of the Lancaster machine, I find that it has—

First. A hopper, an old and well-known hopper, and substantially such as that of Morley.

Second. That the Lancaster machine does not have the hopper valve of Morley or any equivalent for it.

Third. That Lancaster has what may be called the trough, but that it is a different trough from Morley's, holding the button shank upwards in the upper part thereof, and so formed that it turns the button round ninety degrees, and so operated that it presents the buttons to the needle; and the Morley trough performs none of these duties, because it holds the button shank down, does not turn them, and does not present them to the needle.

Fourth. The Lancaster machine has no elastic currugated strip operating in combination with the trough to roll the buttons over so that they lie in the trough shank downwards, and no equivalent or substitute therefor.

Fifth. The Lancaster machine has not Morley's button wheel and supporting table, nor any equivalent therefor, nor any mechanism

of any kind which turns the button one hundred and eighty degrees on a vertical axis.

Sixth. The Lancaster machine has no punch to discharge a button out of the button wheel.

Seventh. It has no split spoon nor any apparatus of any kind for taking a button from a button wheel, turning it ninety degrees, and then carrying it over the needle.

Neither has the Lancaster machine any spring nippers and spring gate acting as substitute for the button wheel, punch, and spoon—first, to open the gate; second, to receive the button; third,
55 to turn it over through ninety degrees; and, fourth, to carry the turned button with its eye over the needle.

And I may say here, speaking of the first claim as a whole, and not of one element thereof, that there is no combination between the feed trough or its end in the Morley machine and the sewing mechanism, unless the button wheel, punch, and split spoon, or their substitutes, the spring gate and spring nippers, are present in the machine, the trough being combined with the sewing mechanism by means of these appliances carrying the buttons, as the patent calls them.

Now, taking up the second element of the claim, namely, the sewing mechanism, I find in the Lancaster machine, it is true, a sewing mechanism, but it is not the sewing mechanism described in the Morley patent and the substitutes therefor referred to in general terms at the close of his description. If the court shall limit the sewing mechanism of the first claim to such mechanism as will make the stitch which Morley says it is one of the objects of this invention to make, then a mere inspection of the stitches made by the Lancaster machine and by Morley, as shown in Defendant's Exhibit Morley and Lancaster Stitches, will prove that the Lancaster machine does not contain the sewing mechanism of the first claim of Morley, which stitch cannot be made without the use of two needles, whereas the Lancaster machine has one only. But if the court shall hold that the claim includes the above-referred-to substitute for the Morley specially described sewing mechanism, it will also appear that the Lancaster machine does not contain them or any equivalents therefor, because those substitutes require either a shuttle carrying a second thread or a Grover & Baker needle carrying a second thread to lock the loop carried through the eye of the button by the needle, and in the Lancaster machine there is no shuttle and no Grover & Baker needle or any device of any kind for carrying a second thread, and the stitch is a single-thread stitch, locked, as I have before stated, by means of the shanks of the buttons.

The sewing mechanism of the Lancaster machine cannot be a known substitute for any of those described in the Morley patent, because the sewing mechanism of the Lancaster machine, taken as a whole, is an entirely new mechanism, making a new stitch.

56 I do not find in the Lancaster machine the second element of the first claim of the Morley patent.

The third element of the first claim of the Morley patent is the

cloth or leather feeding mechanism, and that same mechanism is found in the Lancaster machine.

As neither the first nor second elements of the first claim of the Morley patent are found in the Lancaster machine or any equivalents of or known substitutes for them, it is my opinion that the Lancaster machine does not contain the invention referred to in the first claim of the Morley patent.

The second claim of the Morley patent is to two elements only, namely: First, the sewing mechanism as that of the first claim, including the same various means for locking the loop of thread carried by the perforating needle; and, second, in the words of the claim, "appliances for bringing the buttons successively to position to permit the needle to pass through the eye of each button."

I understand these words to refer, not to the button-feeding mechanism as a whole, but to the appliances which take a button from the end of a feed trough, turn it, and carry it with its eye in a position over the needle—the appliances, in fact, which combine the feed trough with the sewing mechanism; and if any confirmation were wanting as to this meaning of the claim it could be found in the thirteenth claim of the patent, where substantially the same words are used, namely: "Appliances for carrying the buttons successively from the trough to the sewing appliances," in which thirteenth claim these appliances are claimed in combination with the trough.

Now, a thing cannot be in combination with itself or with a part of itself, and as the trough is undoubtedly a part of the button-feeding mechanism, it appears that the word "appliances," etc., of both the second and thirteenth claim, refers to the button wheel, punch, and spring-split spoon, or their substitutes, the spring nippers and the spring gate.

The Lancaster machine, as I have before stated, does not contain the sewing mechanism, or, in other words, the needle for passing thread through the eye of the button and means for locking that loop, substantially as described in the Morley patent, and
57 that is a sufficient reason for saying that it does not contain the invention referred to in the second claim of Morley.

But a more apparent reason for the same statement is that it does not contain the appliances for bringing the button successively to position, which is the second element of this claim, and finally on this head, as the Lancaster machine has neither one of the elements of this second claim or any equivalents or known substitutes for this claim, it is my opinion that the Lancaster machine does not contain the invention referred to in this second claim. The third claim of the patent is to the mechanism described for making the stitch, which it is one of the objects of the invention to make.

It is perfectly evident that the Lancaster machine has only one needle and no frame carrying two needle bars, and does not contain the invention referred to in this claim, which is really a claim to the second element of the first claim of Morley.

The fourth claim of Morley is to the means for making the feed adjustable, and there is no adjustment of the feed in the Lancaster

machine, either by the means described in the Morley patent or in any other way. The fifth claim is to a combination of two needles, one of which is eye-pointed, another hooked, a helper bar, and other accessories.

The Lancaster machine has no eye-pointed needle and no helper bar, and does not contain the invention referred to in this claim.

The sixth claim is to the combination of two needle bars, with certain devices for operating them.

The Lancaster machine has only one needle bar and has not the devices for operating needle bars referred to in this claim, and does not, therefore, contain the invention referred to in this claim.

With regard to the seventh claim, it is sufficient to say that it includes as an element of the combination two needles, two needle bars, and a helper bar. As the Lancaster machine has only one needle, one needle bar, and one helper bar, it is apparent that it does not contain the combination referred to in this claim.

The eighth claim of the Morley patent is substantially the same as the first, except that the third element of the first claim, the feeding mechanism, is claimed more narrowly, but, in fact, claimed only when it is so adjusted as to make alternately long and
58 short stitches, but the first and second elements of this eighth claim, namely, the sewing mechanism and button-feeding mechanism, are the same as those set forth in the first claim.

The reasons which I have given for showing that the Lancaster machine does not contain the invention referred to in the first claim are equally applicable to the eighth claim, and, in my opinion, the Lancaster machine does not contain the invention referred to in this claim.

The ninth claim is to the combination of the take-up (which is a necessary element in producing the specially described Morley stitch), with the accessories thereof. As the Lancaster machine has no take-up and needs none, it is apparent that it does not contain the invention referred to in this ninth claim.

The tenth claim refers to the combination of a needle backer with its accessories; and as the Lancaster machine has no needle backer and no eye-pointed needle which needs a needle backer, it does not contain the invention referred to in this claim.

The eleventh claim refers to the combination of a peculiarly constructed needle plate combined with a presser below the plate and button-feeding devices.

The Lancaster machine has no presser foot below the needle plate, and has the ordinary needle plate of the old wax-thread machine, and not the peculiarly formed plate of the Morley patent, and has not the button-feeding mechanism of the Morley patent and does not contain the invention referred to in this claim.

The twelfth claim refers to the button carrier or spring-split spoon, as I have termed it (shown in Figs. 12, 13, and 14 of sheet 5 of the Morley patent), and the mechanism for operating this carrier, which carrier or its substitute, as I understand it, is claimed as one of the sub-elements in the first claim of Morley.

There is no such button carrier and no carrier of any kind op-

erating as this carier does in the Lancaster machine, and it therefore does not contain the invention of this twelfth claim.

The thirteenth claim is to a combination:

First, of the button-sewing appliances which constitute the stitching mechanism with—

Second, the trough;

59 Third, the appliances for carrying the buttons successively from the trough to the sewing devices;

Fourth, the mechanism for operating said appliances; and,

Fifth, the mechanism for operating the sewing devices.

Now, the "appliances for carrying the buttons successively from the trough to the sewing devices" are the button wheel, with its pockets, the punch and split-spring spoon, operating substantially in the manner described in the patent and combining the end of the trough with the button-sewing appliances or stitching mechanism, as illustrated on sheet 5, Figs. 12 to 15, or their substitutes, the spring nipper for opening the gate, receiving the button, clamping it, turning it ninety degrees, and carrying it over the path of the needle, as illustrated on sheet 6, Figs. 20, 21, 22, and 23.

The mechanism for operating these devices certainly includes, in case of the devices for moving the punch, turning the button wheel, giving the spring spoon a quarter of a revolution, and moving it endwise from the button pocket to the path of the needle so that the eye of the button is over the needle; or, in case the substitute of these parts are used, this mechanism includes the mechanism for revolving the spring nippers through an arc of ninety degress for opening the spring gate and for carrying the button from the end of the trough to a position over the needle.

The mechanism for operating the sewing devices or sewing appliances is that specially described in the patent and represented in the drawings and its equivalents; or, taking the broadest view possible of the claim, not only that mechanism, but also mechanism which would operate the devices which are referred to in the last part of the description of the patent as substitutes for the specially described stitching mechanism; and, if this construction be taken, the claim includes the mechanism represented in the drawings of the patent for moving the two needles and their equivalents, or mechanism for moving a carrier and a shuttle, or mechanism for moving a piercing needle, a carrier, and a non-piercing eye-pointed needle, or mechanism for moving a loop spreader and a shuttle.

Now, it may be admitted for the purposes of my present statement, although such is not my opinion, that the trough of the Lancaster machine is the trough of the Morley patent, but mere inspec-

60 tion of the Lancaster machine will show that the trough thereof is directly combined with the sewing mechanism, and that the machine contains no appliances, either substantially like those contained in the Morley patent or of any kind or sort whatever, from the trough to the sewing devices, and that therefore it has not the third element of the thirteenth claim. I have before said that the Lancaster machine has not the button-sewing mechanism of the Morley patent, nor any equivalent or known substitute

therefor, and it therefore does not contain the first element of this thirteenth claim. As the Lancaster machine has no button-carrying appliances to carry the button successively from the trough to the sewing devices, it cannot have any mechanism for operating it, and that mechanism is the fourth element of the thirteenth claim.

The fifth element of the thirteenth claim is the mechanism for operating the sewing devices of the Morley patent, not mechanism for operating one needle only, as in the Lancaster machine, but mechanism for operating, in the words of the claim, "the sewing devices" or "sewing appliances" either specially described or referred to as substitutes in the patent. Now, it is clear that the Lancaster machine has only one needle, has no mechanism for operating the second piercing needle, no mechanism for operating a Grover & Baker needle, and no mechanism for operating a loop spreader or shuttle, and it therefore has not the fifth element of this thirteenth claim.

In my opinion, the Lancaster machine has none of the elements which make up the thirteenth claim.

And I should be of the same opinion as to this thirteenth claim, viz., that the Lancaster machine does not contain it, even if the court should hold that one element of that claim, viz., the trough, is the same as in the Morley patent.

The fourteenth claim refers to mechanism for shaking the feed trough so as to make it operative.

The Lancaster machine has no such contrivance nor any equivalent for it.

The fifteenth claim is to the combination, with the trough, of the yielding corrugated plate, which serves, in combination with the trough, to roll the buttons over so that they lie shank down,
61 and this plate is a part of the feeding mechanism and one of the sub-elements of the first claims of the patent. There is no such combination as this and no such device as the corrugated plate, nor equivalent for it nor substitute for it, in the Lancaster machine.

The sixteenth claim is to the combination of the hopper valve with the mechanism for moving it, this hopper valve being one of the sub-elements of the first claim.

The Lancaster machine has no hopper valve, no equivalent for it, and no mechanism for moving it.

The seventeenth claim refers to the combination of the hopper with the feed trough and the corrugated strip for turning the buttons over while they lie in the feed trough, and the spring for holding the strip to the trough, and also the devices for moving the corrugated strip.

The Lancaster machine has no corrugated strip, no means for moving it, and no means for holding it down.

The eighteenth claim is a narrow claim to the hopper and the hopper valve and its accessories and the mechanism for operating it.

The Lancaster has no hopper valve, no accessories thereto, and no mechanism for operating it.

For the above reason it will appear that the Lancaster machine

does not, in my opinion, contain the inventions referred to in the fourteenth, fifteenth, sixteenth, seventeenth, and eighteenth claims.

Int. 7. What is the machine that you refer to as making the transverse stitch on the button side of the leather and a double row of longitudinal stitches on the lower side of the leather while sewing on buttons?

Ans. The machine described in the patent to Jerome C. Taft, dated Dec. 7, 1875, an office copy of which I produce.

(Copy offered in evidence and marked "Def't's Ex. Taft Patent.")

HENRY B. RENWICK.

Attest: FREEDOM HUTCHINSON,
Special Examiner.

BOSTON, *Sept.* 13, 1883.

It is stipulated and agreed that the direct examination of the defendant's expert, Mr. Henry B. Renwick, shall go on to-day,
62 and Mr. Thurston, of counsel for plaintiffs, shall have the right to object, when cross-examination is had, to all questions put to him on direct examination, and Mr. Renwick shall be present in Boston and ready for Mr. Thurston's cross-examination some day within ten days or two weeks; and the re-examination of Mr. Chapin, plaintiffs' expert, shall immediately follow Mr. Renwick's cross-examination.

FREEDOM HUTCHINSON,
Special Examiner.

BOSTON, MASS., *Oct.* 17, 1883.

Present: Ambrose Eastman, Esq., of counsel for complainants; George E. Smith, Esq., of counsel for defendant.

Deposition of Andrew H. Jackman.

Direct examination by GEORGE E. SMITH, Esq., of counsel for defendant:

Int. 1. State your name, age, residence, and occupation.

Ans. Andrew H. Jackman, of Nyack, N. Y.; thirty-four years old; shoe manufacturer.

Int. 2. How long have you been a shoe manufacturer, and what is the kind and quality of shoe which you make, and about the amount or volume of your business?

Ans. About nine years. I make a medium grade, and what we consider a good grade, of goods, consisting of women's, misses', and children's, and a small quantity of boys' and youths'. I do about four or five hundred thousand dollars' worth of business yearly.

Int. 3. Have you a partner?

Ans. No, sir.

Int. 4. State whether or not you have made and do make button boots and in what manner you have been accustomed to sew on the buttons.

Ans. The production is almost entirely button boots. I have sewed them on by hand and am doing so at present.

Int. 5. Have you ever used any button-sewing machine; and, if so, when, how long, and whose make was it?

63 Ans. Yes; about a year ago; I think about two or three months; it was a Morley machine.

Int. 6. How many did you have in your factory?

Ans. Two machines.

Int. 7. Have you ever used any other button machine except the Morley?

Ans. No, sir.

Int. 8. State whether or not the Morley Company sent an operator to operate said machines.

Ans. It sent instructors.

Int. 9. State whether the instructors personally operated said machines any of the time, and were they there during all the time the machines were in your factory?

Ans. I have seen them operate the machines, and they were there all of the time—I mean to say one instructor was there all of the time, and a portion of the time two were there.

Int. 10. Please state what was the character of the work done on the machines as compared with hand work, and what advantages and disadvantages the machines had over hand work, so far as you observed.

Ans. Not so good as hand work. They had no advantage at all as to quality; if it had worked successfully there would have been considerable advantage as to economy of labor. The trouble was that the trade objected to the goods being sewed by the machine on account of the coming off of the buttons. The fact of having two rows of stitching inside and the extra stitch on the outside were the disadvantages on a fine quality of goods.

Int. 11. Where was the extra stitch on the outside of the shoe to which you refer in your previous answer?

Ans. On the outside leather quarter of the shoe, nearly opposite the buttons.

Int. 12. How many holes were made in the leather for sewing on each button by said machines and how many by hand work?

Ans. Four, I believe, by the machine; two of them were made by this extra stitch which I speak of that did not pass through the eye of the button. In hand sewing the stitch passes through the eye of

64 the button. The number of holes depends altogether upon how strong you want the button sewed on. A button can be sewed on by hand by making two holes—a hole for the needle to go in and a hole for it to go out. I think that is the way we sew our buttons on by hand. In hand work there are sometimes two and sometimes four holes.

Int. 13. In hand work generally, how many holes are made through the leather for sewing on each button?

Ans. Two.

Int. 14. State whether or not any of the buttons sewed on in your

factory by said machines were sewed over by hand by your operatives; and, if so, about how many.

Ans. About forty cases, I think, were sewed over.

Int. 15. At whose expense?

(Objected to by complainants as irrelevant.)

Ans. The Morley Company's expense.

Int. 16. In answer to Int. 10 you have said the buttons came off that were sewed on by said machines; to how great an extent did that occur?

Ans. To a very large extent.

Int. 17. What was the cause of the buttons coming off?

Ans. When the thread would break it would loosen all the buttons, and in some instances almost all on the shoe would come off.

Int. 18. What kind of thread and buttons did you use?

Ans. The Morley Company furnished the thread and buttons.

Int. 19. To whom do you sell your goods?

Ans. The wholesale and retail trade.

Int. 20. You have stated that you had complaints from your customers that the buttons came off. What, if anything, did you do in consequence of these complaints?

Ans. I saw some of them personally and explained that we were using a machine for that purpose, but had stopped using it, and any loss they might be to I would make good.

Int. 21. What became of the machines?

Ans. The company ordered them sent back to Boston, and they were so sent back.

65 Cross-examination by AMBROSE EASTMAN, Esq., of counsel for complainants:

Cross-int. 22. Can you state just how long those machines were in your factory? If so, please give your best recollection of it.

Ans. Not positively; but I should think about two months.

Cross-int. 23. State, as nearly as you can, the dates when each machine came and when they were sent away.

Ans. I can't do so without referring to my accounts.

Cross-int. 24. In what month were they received, as nearly as you can tell?

Ans. I could not state without referring to the receiving books. My best recollection is that it was a year ago this fall that I used the machines.

Cross-int. 25. Did they come in September, October, or November?

Ans. It is impossible for me to state positively what month they came in. They were sent some time in 1882.

Cross-int. 26. Might it not have been in the spring of 1882?

Ans. It might have been.

Cross-int. 27. Who introduced the machines, and did both come at the same time?

Ans. Mr. Warren was the party who requested the trial of the

machines. The machines did not come at the same time. I don't know how far apart.

Cross-int. 28. Were the machines operated together or successively?

Ans. My impression is that the first machine did not work successfully—in fact, very poorly—and they sent a second one. I don't see how they could operate both machines when they sent the first one on trial.

Cross-int. 29. If they did not operate both machines together what occasion was there for two operators?

Ans. The first machine not working successfully, they recalled the first instructor or operator and sent another one.

Cross-int. 30. Please refer to your ninth answer and explain how this is consistent with your last answer.

66 Ans. There was a man operator came and a lady operator at the same time, and they remained together a portion of the time while the machines were in the factory. I couldn't say how much of the time.

Cross-int. 31. Do you know the names of these operators or instructors?

Ans. Only one of them. I am not positive about her name, but I think she was introduced by the name of Lynch or Walsh.

Cross-int. 32. Then I understand that the two machines were not run at the same time, but that the first machine was set aside after the second came. Is that correct?

Ans. That is my impression.

Cross-int. 33. Were the machines successively run during the whole of the two months that you say they were there?

Ans. I wouldn't like to state that positively on my own information.

Cross-int. 34. How much of the time, according to your best recollection?

Ans. I would have to refer to the superintendent for any positive information, who had charge of the machines while in my factory.

Cross-int. 35. How many cases of shoes, according to your best recollection, were button sewed on these two machines?

Ans. It would be impossible for me to state, as there was no record during the time the machines were in use.

Cross-int. 36. Did you personally inspect the operation of the machines?

Ans. I did; from time to time.

Cross-int. 37. How many cases a day, on an average, would a machine sew?

Ans. I heard the superintendent state that the operator did one day ten cases; that is my recollection—that it was ten cases.

Cross-int. 38. How many cases a day is a fair average of an operator's work button sewing by hand?

Ans. I do not know from my personal knowledge, but my impression is that a case and a half a day is a good day's work by hand.

Cross-int. 39. Then if the quality of the work done on these

67 machines was satisfactory there would be a large economy in their use by reason of the increased product over hand work, would there not?

Ans. There would be a large increase in economy of labor.

Cross-int. 40. How many cases in all of those sewed by these machines were rejected because the buttons came off the shoes?

Ans. When the goods went into the market and it was discovered by the customers that our buttons were coming off they objected to the sending of any more goods until they would be sewed on stronger, or as they were before using the machine, giving them very little trouble. (Answer objected to by plaintiffs' counsel.) To satisfy the customers, so they would not return the goods, I agreed to send operators to sew them on by hand, and did sew on, after shoes were all fitted and made, from forty to fifty cases.

(Answer objected to as not responsive.)

Cross-int. 41. (Int. 40 repeated.)

Ans. It would be impossible for me to tell how many cases were rejected because the buttons came off.

Cross-int. 42. Did the company receive notice of any cases rejected by you on the reason above stated?

Ans. I notified the company that the customers refused to accept the goods and that I would be obliged to sew them over by hand, and that I would have to make a claim for all or a portion of the expense that I would be to.

Cross-int. 43. Did you make any claim on the company in relation to any other than the forty to fifty cases mentioned in the fortieth answer?

Ans. I am not positive whether I made it by letter or not, but I saw Mr. Warren and explained to him that if they would allow—as they had been to considerable expense—the amount of the forty cases we would let it go at that, no matter what the number might be.

Cross-int. 44. Then you made no claim on the company, except for those forty cases, did you?

Ans. My impression is that it was forty cases; but, whatever the number was, that was all the claim I made.

Cross-int. 45. How large a claim was this?

68 Ans. I couldn't tell positively whether it was $10 or $50 without referring to the statement.

Cross-int. 46. Did it exceed $50?

Ans. I could not say. It was more than $10, but I cannot state positively the amount.

Cross-int. 47. Do you know how many of the shoes in these forty cases had buttons off, which needed to be sewed on by hand?

Ans. I do not.

Cross-int. 48. Among how many of your customers were these forty cases distributed, and who were they?

Ans. It would be impossible for me to say that.

Cross-int. 49. Did you send operators from your shop to sew on the buttons?

Ans. It is my impression that the goods came back to the factory and were sewed on there.

Cross-int. 50. Did five customers send back goods to be sewed on in this way?

Ans. Not more than two or three.

Cross-int. 51. Who were they?

Ans. Mr. Scott, of New York, and Mr. Bates, of New York. I have no recollection of any others at present that were returned.

Cross-int. 52. Did you see the goods which were returned to be hand-sewed?

Ans. I did, a portion of them.

Cross-int. 53. Did all those cases which you examined have buttons off on each shoe?

Ans. I think not.

Cross-int. 54. Of those you examined, how many buttons were off a shoe, on an average?

Ans. I have seen some with three and four buttons off and others that had only one or two on.

Cross-int. 55. What proportion of the shoes in the cases you examined had this defect?

Ans. It is impossible for me to state, as the goods were returned to the fitting-room without my examining them fully.

Cross-int. 56. Did you not find quite a proportion of the shoes which were returned to have a full line of buttons on?

69 Ans. Those that were returned had the buttons almost entirely off.

Cross-int. 57. Have you any knowledge what proportion of the shoes in the forty cases returned had buttons off, or do you testify from hearsay?

Ans. I didn't examine all of them; I only speak from what I saw.

Cross-int. 58. How many did you examine?

Ans. I didn't handle only a very small portion of them.

Cross-int. 59. It is only, then, from this very small portion that you can testify from personal knowledge?

Ans. I can testify from personal knowledge from all, but did not examine all.

Cross-int. 60. If you didn't examine them how can you testify from personal knowledge?

Ans. I saw them on the premises.

Cross-int. 61. Do you testify that you saw the buttons off from nearly all of those when you didn't examine them?

Ans. No, sir.

Cross-int. 62. Then how do you testify of personal knowledge?

Ans. I knew they were returned for that reason, and it is impossible for me to tell whether there were one or more buttons off or whether they were off from the whole of them.

Cross-int. 63. Did other customers of yours besides those mentioned in ans. 51 complain of buttons coming off?

Ans. Indirect customers; yes. One was one Rowe, of Boston. I

showed the Morley people a card that was sent from Rowe; there were several more, but I do not recall them at present.

Cross-int. 64. In case of hand-sewed buttons, do not the buttons occasionally come off?

Ans. Very rarely with us, unless from imperfect buttons.

Cross-int. 65. Do your goods have the quarters lap over the vamp in any different way from the ordinary run of button shoes?

Ans. About fifty per cent. are what we call a lap-over quarter shoe and fifty per cent. lap-over vamp shoe.

Cross-int. 66. Do the buttons hold any better on one kind than the other?

70 Ans. In my judgment, none.

Cross-int. 67. Did you make any negotiations for the purchase of the machine?

Ans. Price was fixed in case we concluded to keep the machines.

Cross-int. 68. Did you offer to take them at any less price or royalty?

Ans. No, sir.

ANDREW H. JACKMAN.

Attest: FREEDOM HUTCHINSON,
Special Examiner.

Deposition of George D. Fearey.

OCT. 17, 1888.

Direct examination by GEORGE E. SMITH, Esq., of counsel for defendant:

Int. 1. What is your name, age, residence, and occupation?

Ans. George D. Fearey; thirty-five years old; Albany, N. Y.; shoe manufacturer.

Int. 2. If you are a member of any firm or corporation please state the name.

Ans. I am vice-president and manager of the Fearey Manufacturing Company.

Int. 3. For how long a time have you been engaged in the manufacture of shoes, and for how long a time has the Fearey Manufacturing Company been established and manufacturing boots and shoes?

Ans. Thirteen years myself. The Fearey Manufacturing Company was organized into a corporation about a year ago; it succeeded the firm of Thomas Fearey & Son, which was established in 1844.

Int. 4. Have you any objection to stating the amount of business done by your company annually?

(Plaintiffs object.)

Ans. All the way from three hundred and fifty thousand to five hundred thousand dollars.

Int. 5. Who of your company has charge of the making of your boots and shoes?

(Plaintiffs object.)

71 Ans. I am the manager of the company and have charge of the works.

Int. 6. What kinds of boots and shoes do you manufacture mostly?

(Plaintiffs object.)

Ans. We make a full line of goods for the retail trade—men's, boys', women's, misses', and children's.

Int. 7. Have you ever had in your manufactory any button-sewing machine or machines; and, if so, whose?

(Plaintiffs object.)

Ans. We have had two Morley machines; no other kind.

Int. 8. When and how long did you have those machines there?

(Plaintiffs object.)

Ans. Within the last year; the first we had a little over two months on trial, the second we had about one month.

Int. 9. Where did you find the operator to run the machines?

(Plaintiffs object.)

Ans. The operator was sent us by the Morley Company to teach an operator of our own how to operate; she also worked herself.

Int. 10. State whether or not you personally observed the operation of said machines and personally examined the work performed on them.

(Plaintiffs object.)

Ans. I did.

Int. 11. Will you state what was the character of the work as compared with hand work, and what, if any, advantage you found in using the machines over hand work, and what, if any, disadvantage or objections you found in the work of the machines as compared with hand work?

(Plaintiffs object.)

Ans. The work was not so strong as hand work; the buttons would pull off more easily; we found no advantage over hand work. We objected to the extra stitches over hand work, as it weakened the leather. We objected to the machine because it would not do the different kinds of work which we had in our factory, and on some kinds of work it was entirely worthless, especially so on heavy calf and split work. Another objection was that it
72 took more thread than the hand process; also the buttons would pull off before the shoes were finished.

Int. 12. What do you mean by extra stitches, and where did they show?

(Plaintiffs object.)

Ans. An extra line of stitches shows on the inner side of the shoe; also an extra stitch near the eye of the button on the outside.

Int. 13. Have you in your hand a sample of the Morley button stitch, and will you annex it to this deposition, to explain your previous answer?

(Plaintiffs object.)

Ans. I have and will.

(The same is marked "Defendant's Exhibit Morley Button Stitch, F. H., special examiner.")

Mosley Button Stitch, F. H., special examiner."

Int. 14. In hand work how many lines of thread appear on the inside of the shoe?

(Plaintiffs object.)

Ans. One line.

Int. 15. In hand work how many holes are made through the leather at each button, and how many stitches show on the button side of the leather?

(Plaintiffs object.)

Ans. Usually only two holes; only the stitches that go through the eye of the button show.

Int. 16. In the Morley machine, at what time in the process of making the shoe are the buttons sewed on?

(Plaintiffs object.)

Ans. Before the shoe is vamped.

Int. 17. How is it in hand work?

(Plaintiffs object.)

Ans. After the shoe is vamped.

Int. 18. And which period is the better one in manufacturing?

(Plaintiffs object.)

Ans. The latter is more convenient.

Int. 19. With the Morley machine work, can you estimate what per cent. of buttons pulled off after being sewed on and before the shoe was finished and what per cent. in hand work?

(Plaintiffs object.)

73 Ans. About ten (10%) per cent. in the Morley machine work and scarcely any in hand work.

Int. 20. Did you make at the time any estimate of the comparative cost of sewing on buttons by the Morley machine and by hand; and, if so, which was the cheaper?

(Plaintiffs object.)

Ans. We did; and, taking into consideration the quality of the work, we made up our minds that hand work was the cheaper of the two and went back to hand work.

Int. 21. What became of the said two Morley machines?

(Plaintiffs object.)

Ans. They were returned to the Morley Company by their request, they having acknowledged that they were not suited to do our work.

(Objected to by plaintiffs as not responsive and irrelevant.)

Int. 22. What kind or quality of boots and shoes do you make?

(Plaintiffs object.)

Ans. All kinds of medium-grade goods; we do not make the cheapest and the best.

Int. 23. Will you explain what an overlapped quarter shoe is and state whether such shoe could be done on said Morley machines?

(Objected to by plaintiffs.)

Ans. It is a shoe where the quarter or top of the shoe laps over the vamp, foxing, or lower part of the shoe at the place where the two parts are sewed together. They cannot be done neatly or successfully on the Morley machine.

Cross-examination by AMBROSE EASTMAN, Esq., of counsel for complainants:

Cross-int. 24. When did you have these machines in your factory, giving dates as nearly as you can of the time of receiving and of surrendering each?

Ans. I could not give the exact dates without reference to our books, which I have not here.

Cross-int. 25. In what month, as nearly as you can recollect, did you receive the first machine?

74 Ans. My memory is that it was one of the winter months. I do not remember the exact month.

Cross-int. 26. Do you think it was in December?

Ans. I cannot say without referring to our books.

Cross-int. 27. Do you think it was in January?

Ans. I cannot say without referring to our books.

Cross-int. 28. Do you think it was in February?

Ans. I cannot say without referring to our books.

Cross-int. 29. Are you sure it was not in March?

Ans. I could not be sure without referring to our books.

Cross-int. 30. Are you sure it was not in April?

Ans. I could not be sure without referring to our books.

Cross-int. 31. Are you sure it was not in May, June, July, August, September, or October?

Ans. I could not be sure without referring to our books.

Cross-int. 32. How long can you swear that the first machine was in your shop?

Ans. One month.

Cross-int. 33. What enables you to fix that time?

Ans. Because we took it on one month's trial.

Cross-int. 34. Was it there for just a month—no more nor less?

Ans. More, I should say.

Cross-int. 35. How much longer and what fixes the time in your recollection?

Ans. I could not tell how much longer without referring to our books.

Cross-int. 36. Are you positive that it was any more than a month; and, if yes, why?

Ans. I am; I remember of seeing it there after the month's trial was over.

Cross-int. 37. How can you be certain that it was there more than a month if you can't give the date of its receipt and its surrender?

Ans. Because after a month's trial we notified the company, either in writing or through their agent, that we could not pay for the machine, and the machine remained in our possession.

Cross-int. 38. Who introduced the machine at your shop?

75 Ans. I am not positive about the man's name; I think it was Mr. Warren.

Cross-int. 39. Did he operate the machine or furnish another operator to run it?

Ans. Another operator was sent by the company—a woman; I do not remember her name.

Cross-int. 40. How long did she run the machine?

Ans. I should think about two weeks; perhaps longer.

Cross-int. 41. How often while the machine was there did you inspect the operation of the machine?

Ans. Once a day.

Cross-int. 42. You speak of a second machine. Can you give any idea of the date you received that and the time it remained?

Ans. I cannot give the date or how long it remained without referring to our books.

Cross-int. 43. Do you think it remained there thirty days?

Ans. I think it did, and perhaps longer.

Cross-int. 44. Did an operator from the company run this second machine, and how long?

Ans. Yes; two weeks, perhaps.

Cross-int. 45. How long, according to your best recollection, did your own operator run each machine?

Ans. I should think six weeks altogether on both machines; about equal on each; perhaps it was longer.

Cross-int. 46. Was the stitching which made you reject the machines done by the company's operator or by your own?

Ans. By both; mostly by the company's operator.

Cross-int. 47. Why did you continue to run the machine by your own operator if the work done by the company's operator was unsatisfactory?

Ans. Because the agent of the company desired us so to do, and also because of our desire to make the machine successful if possible.

Cross-int. 48. Was the work *the work* Defendant's Exhibit Morley Stitch done by the company's operator or by your own?

Ans. I cannot tell.

Cross-int. 49. How came you by it?

Ans. I found it lying on the table in this office.

76 Cross-int. 50. It was never done at your works nor on those machines?

Ans. No, sir.

Cross-int. 51. Have you any knowledge that Defendant's Exhibit Morley Button Stitch was done on the Morley machine?

Ans. No; but I can see that it was by the form of the stitch.

(Objected to by complainants' counsel, except the word "no," as not responsive and irrelevant.)

Cross-int. 52. How much of the work done upon the Morley machines in your shop showed defects, as claimed in your ans. 11, by the pulling off of buttons before the work was finished?

Ans. About ten (10%) per cent., if you refer to the buttons only; if you refer to all of ans. 11, all of the work.

(Complainants' counsel objects to all of answer, commencing with the word "if," after the words "per cent.")

Cross-int. 53. How can you be positive that ten per cent. of the buttons pulled off of work done on those machines?

Ans. Because there are from fifteen to twenty buttons on each pair of shoes, and on the average there were two buttons pulled off from each pair.

Cross-int. 54. Do you mean to say that almost uniformly each pair of shoes had two buttons pulled off?

Ans. No; but that the average of shoes done on the machines was two buttons to the pair; on some of the shoes all of the buttons pulled.

Cross-int. 55. How many days were these machines run while in your shop?

Ans. I cannot tell without referring to our books?

Cross-int. 56. Where are your books?

Ans. They are in Albany, N. Y.

Cross-int. 57. Did the company's operator run the first machine every day during the fortnight you say she was in your shop?

Ans. I think she did; I could not say positively.

Cross-int. 58. How many days, as nearly as you can recollect, did your own operator run the first machine?

Ans. I cannot say without looking at our books.

Cross-int. 59. Did she run it one day?

77 Ans. She did.

Cross-int. 60. Did she run it ten days?

Ans. I could not say without looking at our books.

Cross-int. 61. Did she run it five days?

Ans. She did, and I should say much longer, but I couldn't say how long without looking at our books.

Cross-int. 62. Then you can't say positively that she ran it as long as ten days?

Ans. Not without examining our books.

Cross-int. 63. When was the matter first called to your attention that you would be called to testify in this case?

Ans. Two or three weeks ago.

Cross-int. 64. Did you then make your calculation of ten per cent.?

Ans. No, sir.

Cross-int. 65. Did you ever count the buttons pulled off so that you are certain there was an average of ten per cent. pulled off?

Ans. Yes.

Cross-int. 66. How many did you count?

Ans. I counted cases at six different times.

Cross-int. 67. State how many cases of shoes you counted with reference to pulling off of buttons which had been sewed by the Morley machine and what was the result in each case.

Ans. Six cases; I cannot state the exact result in each case.

Cross-int. 68. How many pairs of shoes in a case?

Ans. They average thirty pairs.

Cross-int. 69. How many buttons did you find missing in the first case you tried?

Ans. I cannot state any individual case; I can only state the average of the six cases.

Cross-int. 70. Did you make any record in either case?

Ans. I did not.

Cross-int. 71. How far apart were these examinations?

Ans. I cannot state how far apart; they were all within two weeks.

Cross-int. 72. Do not buttons pull off every now and then which have been sewed on by hand?

78 Ans. Very seldom.

Cross-int. 73. Did you use the same thread for sewing on by the Morley machine which you used for hand sewing?

Ans. We did not; we used a more expensive thread, recommended by the agent of the Morley Company.

Cross-int. 74. Did the buttons pull off commonly by the breaking of the thread or by the cutting of the thread through the leather?

Ans. More by the thread being broken than by the leather being broken; some both ways.

Cross-int. 75. At what point in the manufacture, after the buttons were sewed on by the Morley machine, did the buttons break away?

Ans. In being buttoned before lasted and at different points of handling in buttoning, but especially when being buttoned up for packing.

Cross-int. 76. Does your make of shoes differ from that of other manufacturers generally in the overlapping of the quarter over the vamp?

Ans. No.

Cross-int. 77. Was not your chief objection to the work of the

Morley machine to the extra stitches on the outside of the shoe near the eye of the button?

Ans. No.

Cross-int. 78. Was there much trouble with the work of the machine except on your heavy calf work and split work?

Ans. Not so much on other work, but considerable.

Cross-int. 79. Are you using any sewing machines now for buttons?

Ans. We are not.

Cross-int. 80. Have you any interest in the company which owns the patent on defendant's machine?

Ans. None whatever.

Cross-int. 81. Did you have any negotiation with the Morley Company or its agent in regard to keeping a machine at a price less than their asking price?

Ans. None, except what depended upon the success of the machine.

79 Cross-int. 82. Did you not, or some one on behalf of your concern, offer to keep the machine if the price or the royalty should be reduced?

Ans. All offers, if any, to keep the machine depended on the success of the machine.

Cross-int. 83. When was the offer to keep the machine at reduced price or royalty made to the Morley Company on behalf of your concern?

Ans. No positive or unqualified offer of that kind was made; no such offer was made; I mean to say without qualification.

Cross-int. 84. Did you not negotiate to see if you could get the machine at a less price or royalty than the Morley Company asked?

Ans. I did, provided the machine proved a success.

Cross-int. 85. Was not this after you had tried the machine for some time?

Ans. Negotiations were kept up during the whole time the Morley machines were in our possession, all of which depended on their making the machine a success.

Cross-int. 86. Was the machine taken to your shop before or after the firm of Thos. Fearey & Sons failed in business?

Ans. Not knowing when Fearey & Sons failed in business, I cannot state.

Cross-int. 87. Was it before or after the business passed out of the hands of the firm into the corporation?

Ans. I cannot state without examining our books.

Direct examination resumed:

Int. 88. State whether or not there was any interruptions in the business consequent upon the transfer from the firm to the corporation.

Ans. None whatever.

Int. 89. Do you make shoes both with the quarter overlapping the vamp and also the reverse, or with the vamp overlapping the quarter?

Ans. We do.

Int. 90. Did the machines work more satisfactorily on the latter kind?

80 Ans. Former kind we did not do on the machine, as the Morley agent said the machine was not perfected to do that as yet.

GEORGE D. FEAREY.

Attest: FREEDOM HUTCHINSON,
Special Examiner.

Deposition of Hubert H. Brennan.

OCTOBER 18, 1883.

Direct examination by GEORGE. E SMITH, Esq., of counsel for complainants:

Int. 1. What is your name, age, residence, and occupation?

Ans. Hubert H. Brennan; thirty years old; Brooklyn, N. Y.; shoe manufacturer.

Int. 2. Of what firm, if any, are you a member, and about what is the amount of your yearly business?

Ans. I am a member of the firm of Brennan & Kelley, 80 Grand street, Brooklyn. We do about $300,000 worth of business yearly.

Int. 3. For how long a time have you been engaged in the manufacture of shoes and how long in the shoe business in any capacity?

Ans. Five years; about twenty years altogether, in every capacity, in the business. I was employed in different branches about fifteen years before I commenced manufacturing on my own account.

Int. 4. What kinds and grades of shoes do you make and for what trade?

Ans. We make a cheap and medium class of goods for retail trade in New York State and the Middle and Western States.

Int. 5. State whether or not you make button boots and shoes.

Ans. Principally button boots and shoes.

Int. 6. Have you ever used any button-sewing machine; and, if so, whose make?

Ans. We have used one—the Morley machine.

Int. 7. Have you ever used any other kind or more than one of the Morley?

Ans. No; we only used one of the Morley machines.

81 Int. 8. When did you have said Morley machine in your shop, and how long?

Ans. We had it early in the spring of this year; about five or six weeks.

Int. 9. Who operated the machine?

Ans. A young lady whom they sent on with it, and she taught one of our girls in the shop.

Int. 10. How long did their operator remain with the machine?

Ans. She remained there most all of the time, a day off now and then, and then came back again.

Int. 11. Who has direct personal charge or supervision of your factory?

Ans. I do; or Mr. Kelley, the other partner.

Int. 12. How often did you see said machine in operation while it was in your factory?

Ans. Every working day; I was in the shop all the time.

Int. 13. Please state what was the quality of the work performed on said machine as compared with hand work, and what advantages the machine had, if any, as compared with hand work, and what disadvantages, if any.

Ans. Very poor, as regards finish and strength, as compared with hand work. The only advantage was the extra quantity of work the machine would do as compared with hand work; and then we calculated on saving a good deal of space, as we calculated that two machines would replace about twenty girls. The disadvantages were that we couldn't use it only on the cheapest grade of work. We didn't dare to put it on our best work, because it looked too rough and unfinished, and tore the leather too much, making four holes round the button, and by the time we heard from the first shoes on which we sewed the buttons on with it the first we heard was complaints about the buttons falling off. Customers found fault and wouldn't have them sewed on that way any more. The most complaints we heard were about the buttons being sewed on irregularly and the button fly being puckered up. We had many shoes returned to us on that account alone, and the top button in most all cases came off
82 when they buttoned the shoe tight on the top. We sell all our shoes to retailers, and if there was any trouble we heard about it right off, within a week or so. From the first I objected to the unfinished appearance on the inside.

Int. 14. You speak of the button being sewed on irregularly; will you explain a little more what you mean by that?

Ans. It seemed to me as though there was too much left to the operator's eye; if she started the first button one-eighth of an inch out of the way the feed seemed hard to adjust some way, and the next button would be still further out of the way, and when she noticed that she had too long a stitch she would put them closer together and crowd them and get them closer than the button-holes in the button fly, so that they would pucker up in being buttoned, and we broke a great many needles, and we found that was going to be a source of expense.

Int. 15. At what period in the manufacture of the shoe did you sew on the button by said machine?

Ans. It was the last thing we did before vamping, and vamping finished the upper.

Int. 16. And the lasting is done after that, is it?

Ans. Yes; it is.

Int. 17. State whether any buttons sewed on by said machine came off while you were lasting and finishing the shoe.

Ans. Yes; some came off during the lasting.

Int. 18. How did the number compare with those that came off when the buttons were sewed by hand?

Ans. Rather more came off, and more shoes cracked at the stitch.

Int. 19. What kind of thread and buttons did you use with that machine?

Ans. We used Leeson's five-cord No. 35 thread and Rhode's buttons—buttons they sent on.

Int. 20. How did said thread compare in quality with the threads you used when sewing by hand?

Ans. It was a much superior and more costly thread; it was the best thread used in the country.

Int. 21. State whether or not, in consequence of the com-
83 plaints you have stated and of your own observation of the work, you did anything with the machine; and, if so, what.

Ans. I sent them word stating that the machine was not satisfactory; that we had complaints about the buttons coming off, and we had decided not to keep it, and the machine was sent back to them.

Cross-examination by AMBROSE EASTMAN, Esq., of counsel for complainants:

Cross-int. 22. What time did you get that machine?

Ans. I can't tell you the date. As near as I can tell, it was the spring of 1883, but what month or date I can't say.

Cross-int. 23. Was it as late as May?

Ans. I don't think it was so late as May.

Cross-int. 24. Was it as early as March?

Ans. I think it was. I should locate it about then.

Cross-int. 25. What fixes your recollection that it remained there about five or six weeks?

Ans. Of that I couldn't say; only a general idea that that was about the time it was in the shop.

Cross-int. 26. Are you certain that the company's operator remained there during five or six weeks, with only a day off now and then?

Ans. I am not certain about the number of weeks. To the best of my knowledge, she was there about that time.

Cross-int. 27. Are you positive that she was there more than three weeks?

Ans. Yes.

Cross-int. 28. Was the machine run every day that it remained in your shop?

Ans. No, sir.

Cross-int. 29. How much of the time?

Ans. It was there about ten days or two weeks after we decided not to use it any longer.

Cross-int. 30. Was it run every day during the three or four weeks previous to its stopping?

Ans. A part of every day, except that once or twice it was out of order.

84 Cross-int. 31. How many cases a day was the machine capable of sewing on buttons?

Ans. I couldn't say from absolute knowledge. I have known of its running at the rate of a case an hour.

Cross-int. 32. How did the machine compare with hand work in rapidity of production?

Ans. We calculated it would do the work of eight or ten girls by one operator.

Cross-int. 33. Then if the quality of the work had been satisfactory there would have been great economy in using it, would there not?

Ans. There would have been considerable; yes.

Cross-int. 34. How many complaints did you have from customers in regard to the buttons pulling off?

Ans. The number I couldn't give; there were quite a few. I should think that six or eight different customers I heard myself personally complain about it. Of course, through our salesmen we heard more.

Cross-int. 35. You say in your thirteenth answer that the machine tore the leather too much, "making four holes round the buttons." Do you mean that the thread tore through the leather, or simply making four holes pierced the leather too much?

Ans. The thread did pull through when the strain came on the button, and the four holes made it more liable to pull through.

Cross-int. 36. How many instances can you testify to positively, of your own knowledge, where the thread tore through the leather with the buttons sewed on by this machine?

Ans. A dozen times to be positive, about it. It was fully that many.

Cross-int. 37. Can you give any idea of the total number of the cases of shoes sewed on this machine in your shop?

Ans. No, sir; I cannot.

Cross-int. 38. You were there every working day, were you not?

Ans. Yes, sir.

Cross-int. 39. And you testified that you saw the machine in operation every working day, did you not?

Ans. Every day it was working; yes, sir.

85 Cross-int. 40. Can you give an idea, in a general way, of the average number of shoes sewed per day on the machines?

Ans. Not a very good idea; no, sir. The machine was then on trial like. The instructor came and went at different hours during the day, and we made no regular trial of its speed. I was satisfied of the speed of it all along, and so didn't make any trial of that.

Cross-int. 41. How much of the work done on the machine while in your factory was by your own operator?

Ans. I should say three-fourths of it, with the assistance of the instructor; she generally stood by and pulled in the ends.

Cross-int. 42. Were not a great many cases of shoes sewed on this machine disposed of to your customers from which no complaint came back?

Ans. There might have been some that there was no complaint about. There were complaints about different parts of its; some complained about one thing and some another.

Cross-int. 43. Do your shoes differ in any way in construction from the ordinary button shoes?

Ans. Not more than the usual difference of styles between one manufacturer and another.

Cross-int. 44. What leather was used in the uppers on which these buttons were sewed?

Ans. Grain leather.

Direct examination resumed:

Int. 45. In ordinary hand work in your factory how many holes are made through the leather in sewing each button on?

Ans. Two holes only.

Int. 46. If the quality of the work of a button-sewing machine was equal, or nearly so, to hand work, would such a machine be in great demand among manufacturers?

Ans. Any one making shoes enough to occupy the time of one machine would not be without it, I should think.

HUBERT H. BRENNAN.

Attest: FREEDOM HUTCHINSON,
Special Examiner.

86 *Evidence for Defendant.*

BOSTON, *Oct.* 26, 1883.

Present: Ambrose Eastman, Esq., of counsel for complainants; George E. Smith, Esq., of counsel for defendant.

Deposition of Joseph C. Knights.

Direct examination by GEORGE E. SMITH, Esq., of counsel for defendant:

Int. 1. State your name, age, residence, and occupation.

Ans. Joseph C. Knights; fifty-one years old; I reside in Lynn, Mass.; I am superintendent of C. B. Lancaster's shoe factory at Lynn.

Int. 2. Please state about how large a business is done annually at said factory.

Ans. I don't know whether Mr. Lancaster would be willing for me to state; we do a large business.

Int. 3. What kind of shoes do you make, and of what grade or quality?

Ans. We make ladies' fine sewed goods, medium quality.

Int. 4. How long have you been employed in various capacities in manufacturing shoes?

Ans. Forty years.

Int. 5. State whether or not you have ever used any button-sewing machines; and, if so, what kind or kinds, and when, where, and about how long.

Ans. In the summer of 1881 I was employed by the Portsmouth Shoe Company, Portsmouth, N. H., as superintendent of the company, and there I used a Morley machine. I left there in May,

1882, and the machine had been in use there at that time since the summer of 1881. I have used the Lancaster machine at Lynn. I can't state definitely, but I think it was in the fall of 1882. I can't say how long it was used.

87 Int. 6. Did you use the Lancaster machine a month, or more or less?

Ans. We used it more than a month, I should say.

Int. 7. Did you personally observe the operation of both of said machines and personally examine the work done on both of said machines?

Ans. I did.

Int. 8. State whether or not within six months last past you have had any buttons sewed on by said Lancaster machine; and, if so, when and about how many.

Ans. The Standard Button Fastening Company, using the Lancaster machine, have put on our buttons for Mr. Lancaster's shop during the last six months. We have sewed on with said machine from three hundred to five hundred cases. It was done by the company, in their shop, 79 Washington street, Lynn.

Int. 9. State what advantages, if any, you found in using said Morley machine as compared with hand work, and what disadvantages, if any.

Ans. That is a pretty hard question to answer. I don't think there were any advantages. It takes more buttons and thread than hand work, and their method of putting on the button was bad by having the stock cut up. The machine, while we had it, was out of repair most all of the time. We had to have an extra machine there. I think we had three machines, and very little of the time we had only one operating.

Int. 10. How much more thread was taken than in hand work?

Ans. I should give my judgment to-day that it took a third more.

Int. 11. Looking at Defendant's Exhibit Morley Button Stitch, which was made a part of George D. Feary's deposition in this case, state whether or not the stitch is similar to the one made on said Morley machines.

Ans. Yes, sir; it is.

Int. 12. How many rows of thread do you find on the inside of said exhibit and how many are there in hand work?

Ans. I should say there were three rows here and two in hand work.

88 Int. 13. You speak, in answer to Int. 9, of the stock being cut up. What do you mean by that?

Ans. I mean that the needle punctures the stock four times in the Morley machine.

Int. 14. How is it usually in hand work?

Ans. Two holes.

Int. 15. At what period of the manufacture were the buttons sewed on by said Morley machine?

Ans. Before vamping.

Int. 16. Could they be sewed on after being vamped by said Morley machine?

Ans. It would not be practicable.

Int. 17. When are they sewed on in hand work?

Ans. After the shoe is vamped.

Int. 18. Which is the better time, and why?

Ans. After vamping is the better time, because the shoe then is in the right position to be put on properly.

Int. 19. What do you mean by vamping?

Ans. It is the process of putting on the fore part of the shoe to the quarter or hind part. I wish to state another objection to the working of the machine: it is that the button is not independently fastened. You can take one end of this stitch and ravel it out; throw off all the buttons as quick as you could pull off one.

Int. 20. State whether or not the end of the thread had to be fastened after sewing on buttons by said Morley machine.

Ans. It did.

Int. 21. State whether or not you observed any trouble caused by the puckering of the work in sewing on buttons by the Morley machine.

Ans. I did, on all light material.

Int. 22. In using said Lancaster machine and observing work done on it, how did the work compare in quality with work done on said Morley machine and also with hand work?

Ans. The Lancaster machine made very much neater work than the Morley machine and quite as neat as hand work.

Int. 23. How was it in other respects than neatness?

89 Ans. The independent stitch; I mean that the Morley stitch you can take and ravel it right out, which you cannot do by the Lancaster stitch, as each button is fastened separately, having no connection. I don't think of anything more.

Int. 24. State whether or not you have with you any specimens which you saw made on the Lancaster machine. If so, will you please produce them and annex them to this deposition?

Ans. I have and do.

(The same are marked "Defendant's Exhibit Lancaster Button Stitch, F. H., special examiner.)

Int. 25. So far as your observation of said Morley and Lancaster machines goes, which is the more practical and better button-fastening machine, and which works more rapidly?

Ans. The Lancaster is most decidedly more practical and more rapid and the better button-fastening machine.

Int. 26. The Lancaster machine will do how much work as compared with operatives sewing by hand?

Ans. A woman sewing on buttons by hand will sew on about one hundred pairs of boots in ten hours, and my judgment is that the Lancaster machine will sew on from seven hundred to nine hundred pairs in the same time.

Cross-examination by AMBROSE EASTMAN, Esq., of counsel for complainants:

Cross-int. 27. How long have you been superintendent of Lancaster's shop in Lynn?

Ans. Since a year ago last May.

Cross-int. 28. Is your employer, Mr. Lancaster, the defendant in this suit?

Ans. I don't understand it so. I mean to say that I do not know the proper answer to the question.

Cross-int. 29. Is your employer's name Mr. Charles B. Lancaster, who was the promoter and caused the organization of the Standard Button Fastening Company?

Ans. Yes, sir; that is his name. Yes, sir; he was the promoter of that company; he was one of them.

90 Cross-int. 30. Do you not know that this suit in which you are testifying was brought by the Morley Company against said Charles B. Lancaster?

Ans. Yes.

Cross-int. 31. Have you any interest personally in the Standard Button Fastening Company?

Ans. No, sir.

Cross int. 32. How long were you employed in the Portsmouth Shoe Company's shop before going to Mr. Lancaster, and in what capacity were you employed there?

Ans. I was there a little over two years as superintendent.

Cross-int. 33. Why did you leave?

Ans. I resigned my position.

Cross-int. 34. Was there any difficulty between you and your employers which led to your resigning?

Ans. Not particularly. I wanted to be relieved from the position.

Cross-int. 35. What officer of the company employed you there?

Ans. The board of directors.

Cross-int. 36. Who were they at the time?

Ans. I don't know as I can give you all of the names. I can give some of them. Frank Jones and Dr. Potter and Charles H. Mendum and Henry M. Clark and William Ward and a Mr. Winchester. I have forgotten his first name.

Cross-int. 37. Who was the treasurer of the company?

Ans. Charles H. Mendum the last part of my being there.

Cross-int. 38. Did not Mr. William W. Whitcomb have some position in the company? If so, state what it was.

Ans. He was general manager and treasurer, and afterwards president of the company.

Cross-int. 39. Were your relations pleasant with Mr. Whitcomb during your whole stay and when and since you left there?

Ans. Personally they were very pleasant indeed.

Cross-int. 40. How otherwise than personally?

Ans. In business they were not. We couldn't agree.

Cross-int. 41. What were these business differences about?

(Objected to by defendant's counsel.)

91 Ans. Business—shoe business; his ideas and mine of manufacturing a shoe were different.

Cross-int. 42. In what respect did your ideas differ in manufacturing shoes?

(Objected to by defendant's counsel.)

Ans. In the general management of the business.

Cross-int. 43. State specifically what were the points of difference between you as to the management of the business.

(Objected to by defendant's counsel.)

Ans. I don't remember specifically.

Cross-int. 44. State any single point about which you and Mr. Whitcomb differed in the management of the business.

Ans. I don't remember any particular point just now.

Cross-int. 45. Do you state and mean us to understand upon your oath that you had differences with Mr. Whitcomb in regard to the management of the business which were such that they led to your retirement and yet that you cannot remember a single point on which you differed?

Ans. Well, I might say that Mr. Whitcomb thought they could make some money there and I thought they couldn't; there was not inducement enough for me to stay—that is, prospects were not bright enough for me to stay, as part of my salary was to come from the profits of the concern.

Cross-int. 46. Was you a stockholder?

Ans. I was and am.

Cross-int. 47. Did you have any differences with any other of the directors?

Ans. No, sir; not any.

Cross-int. 48. Did you and the general manager differ at all in regard to the use of the Morley machine?

Ans. Not at all.

Cross-int. 49. Who introduced the machine there and at whose request?

Ans. I did; at the request of Ed. S. Fay and the inventor, Mr. Morley.

Cross-int. 50. What personal care or attention did you give to the work of the Morley machine?

92 Ans. I took great interest in the machine and gave the inventor everything that he wanted to test the machine.

Cross-int. 51. What personal observation did you give to the working of the machine?

Ans. I examined the work as it came out from the machine.

Cross-int. 52. Was the operator one of your shop hands?

Ans. I think they sent a woman from Boston from their office here and she instructed one of our girls there.

Cross-int. 53. What proportion of the time that the machines were in the shop was one of them running?

Ans. We tried to keep it going most of the time.

Cross-int. 54. When running well, how many pairs of boots per day were but'on-sewed on this machine?

Ans. I couldn't say.

Cross-int. 55. State as nearly as you can recollect.

Ans. I should say from sixty to three hundred pairs, according to the condition of the machine.

Cross-int. 56. Did you never see the machine, during your stay in the Portsmouth Shoe Company's shop, sew buttons on at a greater rate than three hundred pairs per day, or than thirty pairs per hour?

Ans. I think there was one day that the operator put on six hundred pairs; that is as near as I can remember. I remember one day there when we were trying to see what we could do. I was very much interested in the machine.

Cross-int. 57. Was not one or another of the machines operated nearly every working day?

Ans. Yes, sir.

Cross-int. 58. And are you positive that only from six to thirty pairs per hour was the average rate when the machine was running?

Ans. I have stated as near as I could recollect; I couldn't give a positive yes or no to the question.

Cross-int. 59. Was any daily record kept of the work done on the machine?

Ans. At the first of running the machine there was not; at the last part there was.

Cross-int. 60. How long a time before you left had a daily account been kept of the work of the machine?

93 Ans. I have no definite idea.

Cross-int. 61. Was it a month?

Ans. I couldn't say.

Cross-int. 62. Was it a week?

Ans. I couldn't say.

Cross-int. 63. Was it a single day?

Ans. Yes, sir; I should say it was.

Cross-int. 64. Are you certain it was more than one day?

Ans. I think I am certain it was more than that, but I don't have an idea how long, not having thought of the matter since at all.

Cross-int. 65. You are not certain it was kept as much as a week before?

Ans. I couldn't say.

Cross-int. 66. Then the only thing that you can positively testify to is that the account was kept for one or two days, is it not?

Ans. I think it was; that is the only thing about it that I can testify positively to at the present time.

Cross-int. 67. Is the answer which you have given as to the number of pairs per day done on the machine based upon these accounts which were kept for one or two days prior to your leaving?

Ans. No, sir.

Cross-int. 68. What is your basis of calculation?

Ans. My statement that they sewed on from one to three hundred pairs per day is what I thought they had done at the time.

Cross-int. 69. What is your basis of calculation?

Ans. My basis of calculation is what I think they did on the machine.

Cross-int. 70. What was there to make you reckon that number?

Ans. My thoughts of what was done.

Cross-int. 71. Did you ever count them?

Ans. Yes, sir.

Cross-int. 72. Did you ever count a day's work on the machine?

Ans. I can't answer that question.

Cross-int. 73. Did you ever count the number of pairs done in one day on the machine?

Ans. Yes; I presume I have a great many, but I have no definite recollection what it is now.

94 Cross-int. 74. Can you testify positively that at the end of any one day's work you personally counted the number of pairs done in that day on this machine?

Ans. Yes, sir; not only one day, but a good many.

Cross-int. 75. Can you testify positively how many pairs were shown by any one of these counts?

Ans. I cannot.

Cross-int. 76. What, then, are you testifying from except vague impressions?

Ans. I am testifying as near as I can remember, and I say I don't remember the exact amount of any one day's work done on the machine.

Cross-int. 77. How many times can you testify positively that you counted the pairs from a day's work on the machine?

Ans. I have no positive recollection at all.

Cross-int. 78. Are you certain that you did it five distinct times?

Ans. No, sir.

Cross-int. 79. Three distinct times?

Ans. I have no positive recollections, only as superintendent of the factory it was my business to look it up, how many times or how often, as I made no special thing to look it up, as it came under my general supervision.

Cross-int. 80. You have said in Ans. 78 that you have no positive recollection of making this count five distinct times. Have you any positive remembrance of doing it at any time except, as you say, it came under your general supervision? Is not that all the real certainty you have about it?

Ans. As it was my business as superintendent to look after the work in the factory, I probably looked it up from one to five times a day. I never made any record of my investigation, so I cannot give a positive answer in the matter.

(Answer objected to by complainants' counsel as wholly irresponsible.)

I don't know how I can answer that any differently from what I have. I have not the hour or day or anything of the kind.

Cross-int. 81. I haven't asked for hour or day, and your answer has nothing to do with the question put, and I put it again: 95 Have you any distinct remembrance of any occasion when you counted the number of pairs done in a day on the machine?

(Preliminary part of question until the part commencing with "Have you," etc., objected to by defendant's counsel.)

Ans. As that was part of my duties as superintendent, I had no special time to look up the matter of sewing on buttons by machine. I have a distinct recollection of looking after the button business, but not at any special time. I made it as a special thing.

Cross-int. 82. Can you remember making this count on any one day?

Ans. My recollection is that I can't. I did it about every day I was in the factory; that was my business every day.

Cross-int. 83. Was it your business every day to count the pairs which had been done on the machine that day?

Ans. Yes, if I thought best to do it.

Cross-int. 84. How often did you actually do it?

Ans. I haven't the slightest idea.

Cross-int. 85. And you are no more able now, are you, than you were when you answered Int. 78, to state positively that you actually counted them even five different days?

Ans. I should say no to that.

Cross-int. 86. If you ever counted the pairs done on the machine on any one day, do you know whether the machine had on that day been run through the whole day?

Ans. There was very seldom a day when they ran the machine all day, and I don't know that I ever did.

Cross-int. 87. Would not, then, a full day's work on the machine have shown a larger product than you have named?

Ans. That would depend altogether upon the operator.

Cross-int. 88. Would it be fair to say that even three hundred pairs was the capacity of a machine if your count did not include a full day's work?

Ans. Well, that would depend upon the operator, as it was a new machine and the employé was not up in the art of running it.

Cross-int. 89. Then you do not mean to say, do you, that a skilled operator would do only one hundred to three hundred pairs on the machine in ten hours' running?

96 Ans. What they could do then and what they could now is two different things. That would depend altogether upon how the machine ran, as there were a great many contingencies came in at that time. If everything is favorable, three hundred pairs would be a small ten hours' work.

Cross-int. 90. From what you saw of the machine, what would be its capacity for ten hours' work, running continuously?

Ans. I should think from four hundred and eighty to six hundred pairs. I speak of an experienced operator in that case.

Cross-int. 91. In your forty years of shoe manufacturing you have had occasion to try very many new machines, have you not?

Ans. I have.

Cross-int. 92. Of those most valuable to the trade, have not first specimens been often troublesome and requiring new adjustments before they worked satisfactorily?

Ans. They have.

Cross-int. 93. These Morley machines at Portsmouth were among the very first put on the market, were they not?

Ans. Yes, to my knowledge, that is the first I ever saw.

Cross-int. 94. Did they give more trouble than was reasonably to be expected from so complex a machine in its first place?

Ans. No, sir; I don't know as they did.

Cross-int. 95. Was there any difficulty in its operation that did not seem capable of correction when the conditions of the work should be better understood by the inventor and the machine adjusted accordingly?

Ans. At that time I didn't see anything.

Cross-int. 96. Do you know whether those machines or any of them have been since running in the Portsmouth factory?

Ans. I think they have two machines there, as they were bought and paid for before I came away.

Cross-int. 97. Did the company buy them against your objections?

Ans. I had no objections to them.

Cross-int. 98. Did you recommemd their purchase?

Ans. I did.

Cross-int. 99. When the Lancaster machine was running
97 in his shop at Lynn, was there any interruption or stopping during the day?

Ans. Occasionally it would get out of repair.

Cross-int. 100. Did it run every working day while it was in the shop?

Ans. I think it did, more or less.

Cross-int. 101. Did you count the number of pairs done on the Lancaster machine of any one day's work?

Ans. I don't think I looked it up very thoroughly, because there was a question about its staying there.

Cross-int. 102. In answer to Int. 26, does your estimate of what the Lancaster machine can do rest upon any actual count of a day's work upon it?

Ans. My judgment is based on what I know they have been doing in their (Standard Fastening Shoe Company's) shop this past season.

Cross-int. 103. How do you know what the machines there have been doing?

Ans. By personal observation and what their operators and superintendent have informed me.

Cross-int. 104. Do you know, from your personal observation, how many pairs any of their Lancaster machines or the Lancaster machine which was in his shop has done in any one day?

Ans. I never counted the work.

Cross-int. 105. Then, your estimate of 700 to 900 pairs in ten hours given in Ans. 26 is really from what they told you, is it not?

Ans. My judgment was based on that; yes, sir.

Cross-int. 106. In Ans. 10 you say that your judgment is that the Morley machine uses a third more thread than is needed for hand work. How do you get that result?

Ans. I have tested it, and that is as near as I can remember the result.

Cross-int. 107. What was the test?

Ans. Sewing on the buttons—same number of buttons, same sized boot, drawing the thread out and measuring it.

Cross-int. 108. Did you make more than one test?

98 Ans. Yes, sir; I made several.

Cross-int. 109. In Ans. 9 you speak of the stock being cut up by the mode of sewing on the Morley machine. Did this cause injury or loss of boots made on machine?

Ans. I don't think it did while I was there.

Cross-int. 110. Then, your criticism is simply expressing your judgment that these extra stitches made the work bad, is it not?

Ans. Yes.

Cross-int. 111. No boots were returned to the company by its customers on this account, were there?

Ans. Not to my knowledge.

Cross-int. 112. Why do you say that the machine takes more buttons than are needed in hand work?

Ans. Because they cannot use an imperfect one; it must be a perfect one. They used to make a special business of sorting them before they sent the buttons to us.

Cross-int. 113. Then, in sewing by hand you can use up poor buttons, while on the machine you must have good ones. Am I right?

Ans. Yes.

Cross-int. 114. With good buttons for both, the hand-sewed shoes would require as many as the machine sewed, wouldn't they?

Ans. Yes, sir.

Cross-int. 115. Did you have any serious trouble practically from the raveling out of Morley stitches and loosening buttons in the goods you made?

Ans. Yes.

Cross-int. 116. What proportion of the boots sewed on the Morley machine gave trouble in this way?

Ans. I should think there would be from five to eight pairs in a case of sixty.

Cross-int. 117. Can you state from distinct recollection that this was an average proportion in all the cases of boots sewed there on the machine?

Ans. That is my recollection to-day.

Cross-int. 118. What was done to remedy this?

Ans. The buttons were replaced by hand afterwards.

99 Cross-int. 119. Was it not easy for a careful operator to fasten the ends of thread so as to avoid this defect?

Ans. I think not, absolutely.

Cross-int. 120. Did you ever compare buttons sewed on by the Morley machine with buttons sewed on by the Lancaster machine, when both had been properly sewed, to find which buttons would hold more firmly?

Ans. I have.

Direct examination resumed:

Int. 121. Which did you find held more firmly?

Ans. The Lancaster machine gave the best result.

Int. 122. You have said your employer was a promoter of the Standard Button Fastening Company; is he now interested in that company, if you know?

Ans. I don't think he is.

Int. 123. How many operators assisted in sewing on the six hundred pairs which you said were done on the Morley machine as an experiment in one day?

Ans. The operator had a little girl to pull in the stitch and fasten the thread, which is a very necessary operation.

Int. 124. Is it necessary to fasten the thread in the Lancaster machine?

Ans. No.

Int. 125. What grade or quality of boots were made by the Portsmouth Company while you were with them?

Ans. Medium and cheap.

Int. 126. On which grade did you use the Morley machine?

Ans. The cheap.

Int. 127. Did you try it on the best quality made there, especially serge and light kid?

Ans. No.

Int. 128. Did you use it on serge at all?

Ans. Yes; we tried an experiment, but it was a failure.

Int. 129. What was the trouble?

Ans. It would pucker serge and light kid.

Int. 130. Were the shoes you made there sold to jobbers or retailers?

100 Ans. Jobbers.

Int. 131. Did you ever have any stock in the Morley Company?

Ans. I did.

Int. 132. Did you have it while the machine was then at Portsmouth?

Ans. I did.

Int. 133. In your experience of forty years with shoe machinery did you or not ever know any machines that proved failures after years of experimenting and some other machine came in to supply the place?

Ans. I have known machines that have become obsolete entirely.

Cross-examination resumed:

Cross-int. 134. When you compared buttons sewed on by the two machines, as stated in Ans. 120, did you see either of the buttons when the machine was operating to sew them on?

Ans. Yes. sir.

JOSEPH G. KNIGHTS.

Attest: FREEDOM HUTCHINSON,
Special Examiner.

Deposition of Harnden H. Jennings.

OCT. 30, 1883.

Direct examination by GEORGE E. SMITH, Esq., of counsel for defendant:

Int. 1. State your name, age, residence, and occupation.

Ans. Harnden H. Jennings. I am forty-seven years old. I reside in Lynn, Mass. I am a shoe-stitcher by occupation.

Int. 2. State how long you have been engaged in said business, and explain particularly what the business is.

Ans. I have been engaged in the business upwards of ten years. The business is taking the uppers from the cutter and fitting them for the bottoms.

Int. 3. State what particular work you do on said uppers.

Ans. I stitch them. I take the outside and the linings and stitch them together, and we fit them by stitching them, of course.

101 Int. 4. Please name the particular parts or pieces of which the uppers are composed.

Ans. Quarters and linings and the vamps.

Int. 5. What are vamps?

Ans. Vamps are the front part of the shoe.

Int. 6. Is it part of your business in preparing the uppers for the bottoms to make the button-holes and sew on the buttons?

Ans. It is.

Int. 7. Whose shoes do you stitch?

Ans. The shoes of S. B. Fuller & Sons.

Int. 8. Is it job work?

Ans. We usually call it contract work. I stitch them by contract at so much per pair.

Int. 9. Please state about how many pairs of boots and shoes you stitch annually.

Ans. Upwards of 200,000.

Int. 10. Have you ever used any machine or machines in stitching on your buttons, or have you had your buttons stitched on by any machine or machines; if so, whose make?

Ans. I have used the Morley machine. I have had them stitched on by both the Morley and the Lancaster machines.

Int. 11. When did you first use a Morley machine, and how long?

Ans. I think it was between the sixteenth and twenty-third days of October, 1883, that I used the Morley machine.

Int. 12. How long did you use it, and how many pairs did you sew with it?

Ans. We used it two days, and sewed about five hundred or six hundred pairs.

Int. 13. Who operated the machine?

Ans. An operator the Morley Company sent with the machine.

Int. 14. What became of the machine?

Ans. The Morley folks took it away from my shop.

Int. 15. What objections, if any, did you have to the machine and its work? Please state fully and particularly.

Ans. First objection was to its sewing on the button before the boot was vamped; another objection was as to the appearance
102 of the boot after the buttons were sewed on; another objection was that by cutting or breaking a thread you could unravel that stitch and the buttons would fall off. Those are the main objections I had to it.

Int. 16. What do you mean or refer to in your last answer by the appearance of the boot to which you objected?

Ans. The double row of thread on the inside of the boot.

Int. 17. Why did you have the machine taken out?

Ans. For those objections I have stated.

Int. 18. Considering both the quality and expense of the work, should you have your buttons sewed on by said Morley machine or by hand?

Ans. By hand.

Int. 19. When did you first have any buttons sewed on by the Lancaster machine?

Ans. During the present season; perhaps in the month of August.

Int. 20. Have you ever had one in your shop?

Ans. I have not.

Int. 21. Where were they sewed?

Ans. They were sewed on in Lynn—at the Lancaster shop, I presume they call it. I could, probably, particularize and give more definite information on that subject if you require it. It was on Washington street.

Int. 22. Have you been in the shop and seen the machines operate?

Ans. I have, sir.

Int. 23. How do you have your buttons sewed on now?

Ans. By the Lancaster machine.

Int. 24. Which do you prefer, hand work or work done on the Lancaster machine, and why?

Ans. I prefer work done on the Lancaster machine because it is neater, stronger, and less expensive.

Int. 25. You spoke of the stitch sewed on the Morley machine raveling and the buttons falling off. How is it on the Lancaster machine?

Ans. It will not do that.

Int. 26. Have you ever cut the thread on the inside of the
103 leather on each side of the button sewed on the Lancaster machine and then pulled the button; and, if so, what was the result?

Ans. I have done so frequently, but I have never succeeded in pulling a button off.

Int. 27. Do you know whether the ends of the thread of the Morley machine have to be fastened in any way after sewing on a row of buttons?

Ans. Well, I presume they are, for I have noticed them use a pair of pliers to pull the ends of the thread after sewing on a row of buttons, and have understood it to be for the purpose of fastening that thread.

Int. 28. Did the operator of the Morley machine in your shop use a pair of pliers or nippers in that way?

Ans. The operator did.

Int. 29. Is that necessary with the Lancaster machine?

Ans. I presume it is not necessary, for I have never seen the pliers used by the Lancaster machine.

Cross-examination by AMBROSE EASTMAN, Esq., of counsel for complainants:

Cross-int. 30. You say in your sixth answer that part of your business is to make button-holes and sew on buttons on uppers; how much of it?

Ans. Probably that is about nine-tenths of my business.

Cross-int. 31. How many pairs of boots do you stitch annually which have buttons sewed on them?

Ans. Well, I should say 200,000 pairs or more.

Cross-int. 32. How many pairs per day, on an average, will an operator sew on by hand?

Ans. One hundred pairs would be a good average.

Cross-int. 33. How many days was the Morley machine at work in your shop?

Ans. Two days, I think; perhaps part of another.

Cross-int. 34. Was the machine running ten hours on each of those days?

Ans. It was not.

104 Cross-int. 35. How many hours on each day, as nearly as you can recollect, did it run?

Ans. Seven or eight hours.

Cross-int. 36. Between what hours?

Ans. Between six in the forenoon and six in the afternoon.

Cross-int. 37. What particular hours of the day was the machine idle?

Ans. No particular hours, as I recollect.

Cross-int. 38. What circumstances enable you to state the time of running at seven or eight hours?

A. No particular circumstance that I know of that makes me think that; it is merely my opinion.

Cross-int. 39. How much of the time did you watch the operation of the machine?

Ans. Very little of it.

Cross-int. 40. Are you positive, so that you can definitely swear that the machine was running more than five hours on either day?

Ans. Yes, sir.

Cross-int. 41. How do you know, if you watched the machine but very little?

Ans. I know by observation.

Cross-int. 42. At what hour in the morning did the machine actually begin work on the first day?

Ans. Well, my best recollection is that on the first day it was somewhere about 8.30 or 9 a. m.

Cross-int. 43. Do you distinctly remember that the machine began work on that day not later than 9 o'clock?

Ans. I am not certain that it began work at 9; it might have been later.

Cross-int. 44. Was it not as late as 10 o'clock on the first day of its trial?

Ans. I don't think that it was.

Cross-int. 45. Are you so certain of it that if the operator stated it was 10 o'clock before she began work on the machine you would accuse her of an untruth?

Ans. No; I am not.

105 Cross-int. 46. What is you nooning hour—from what time to what time?

Ans. From 12 to 1 o'clock.

Cross-int. 47. Between 10 and 12 o'clock on the morning of that first day, how many times did you inspect the working of the machine, as nearly as you can tell?

Ans. I am not able to state. I might have inspected it a half a dozen times and I might not.

Cross-int. 48. Are you sure you inspected it three times in that interval?

Ans. I am not.

Cross-int. 49. Are you sure you inspected it at all in that interval?

Ans. I am.

Cross-int. 50. Twice?

Ans. I am not sure that I inspected it twice.

Cross-int. 51. Then, if during that interval the machine was stopped a part of the time you would not necessarily have known it, would you?

Ans. No, sir.

Cross-int. 52. The machine was not run during the nooning, was it?

Ans. Not to my knowledge.

Cross-int. 53. What were the hours of afternoon work?

Ans. From 1 until 6.

Cross-int. 54. How many times during the afternoon of that first day can you testify positively that you inspected the work of the machine?

Ans. Once or more.

Cross-int. 55. And if while you were not inspecting it the machine was idle during any time of that afternoon you would not necessarily have known it, would you?

Ans. No, sir.

Cross-int. 56. If the operator should testify positively that she did not run the machine more than five hours on that day would you not believe her?

Ans. I wouldn't doubt her word.

106 Cross-int 57. And you have no positive knowledge to the contrary of such a statement, have you?

Ans. No; I have not.

Cross-int. 58. Did you give any more attention or closer inspection to the working of the machine on the second and third days than on the first?

Ans. Generally speaking, I don't think I did.

Cross-int. 59. Then, you have no more definite actual knowledge of the time during which the machine was run on these days than on the first, have you?

Ans. No, I have not; not actual knowledge.

Cross-int. 60. How do you fix the number of pairs done on the machine?

Ans. By knowing about the number of cases done and the number of pairs in each case.

Cross-int. 61. Is this from your own actual knowledge by counting or is it from what is reported to you?

Ans. It is from my own actual knowledge of the number of cases stitched.

Cross-int. 62. How many cases and how many pairs to each case?

Ans. If I recollect right, she sewed on in the time the machine was there from eight to ten sixty-pair cases. I could not tell certain unless I consulted my book.

Cross-int. 63. Were they full cases?

Ans. I am not certain of that, but I think they were full cases—no parts of other cases.

Cross-int. 64. How many hours was the machine running on the third day of its stay in your shop?

Ans. I don't recollect of its running at all on the third day.

Cross-int. 65. Then, if it were running but ten or twelve hours during the two days it was in your shop it sewed three or four times, at least, as fast as hand-work, did it not?

Ans. It did, if it didn't run more than that time.

Cross-int. 66. You said in your fifteenth answer that you objected to the machine because the buttons were sewed on before

107 the boot was vamped. Is that a serious objection, provided the machine would save largely in labor?

Ans. It is more labor to vamp after the buttons are sewed on, consequently it would be a serious objection, in my opinion.

Cross-int. 67. How much actual cost would be added in the making of the shoe by button sewing before the boot was vamped to that of sewing the other way.

Ans. I am not able to answer that question.

Cross-int. 68. What price per pair do you receive for stitching?

(Objected to by defendant's counsel.)

Ans. We have different prices for different qualities of goods; all the way from ten cents per pair up to thirty.

Cross-int. 69. Do you charge any specific part of that sum for sewing on the vamps; if so, what is it?

Ans. I do; I pay fifty cents a case on plain vamps.

Cross-int. 70. What would be the price that you must pay above that fifty cents a case if the vamps were sewed on when buttons had been first attached?

Ans. I should have to pay at least a quarter of a cent a pair more, making fifteen cents a case.

Cross-int. 71. How much per case do you pay for sewing on buttons by hand?

Ans. Six cents per hundred buttons, which would make seventy-two cents in an ordinary case of 1,200 buttons to the case; this is for labor alone.

Cross-int. 72. Then, if the Morley machine would do the work of four hand operators and work satisfactorily, the cost would be not far from eighteen cents for labor, would it not, per case?

Ans. Yes; it would in that case.

Cross-int. 73. Then, if the work were satisfactory, you could afford to pay fifteen cents per case extra for sewing on vamps if you saved fifty-four cents per case in sewing on buttons, could you not?

Ans. Oh, yes, indeed.

Cross-int. 74. In your sixteenth answer you say you object to the appearance of the shoe because of the double row of thread on the inside of the boot; this doesn't show on the outside, does it?

108 Ans. Not at all.

Cross-int. 75. Isn't that rather sentimental, then?

Ans. It might be in some people's opinion.

Cross-int. 76. Did any of the boots which were sewed on the machine in your shop give trouble by breaking of the thread and unraveling the stitch?

Ans. They did not.

Cross-int. 77. Then your objection to that feature was rather theoretical than from any experience of your own, was it not?

Ans. I think not.

Cross-int. 78. But none gave you any trouble, you say, in this particular?

Ans. Not at all.

Cross-int. 79. How long before the machine came into your shop had you been having your buttons sewed on by the Lancaster machine?

Ans. I am not able to state any definite period; probably two or three weeks.

Cross-int. 80. Were all your buttons, then, being sewed on by the Lancaster machine or were part of them still sewed on by hand?

Ans. Most of them were sewed on by the machine; a few of them were by hand.

Cross-int. 81. How much do you save, on an average, per case by having them sewed on by the Lancaster machine over the cost by hand work?

Ans. Well, in round numbers, I would say about twenty-five cents per case.

Cross-int. 82. Do you employ any hand work now?

Ans. I think we do not at present.

Cross-int. 83. Do you know of any other shops than your own in Lynn where the Morley machine is in use?

Ans. Not from my own personal knowledge. I have heard of shops where they were in use.

Cross-int. 84. You were prejudiced somewhat, were you not, in favor of the Lancaster machine and against the Morley before trying the latter at all?

109 Ans. No; I don't think I was prejudiced.

Cross-int. 85. Had you not formed an opinion in regard to the Morley before it came to your shop?

Ans. Well, possibly I had, as most every one does form an opinion, but I don't think it was prejudicial to the Morley machine at all—that is, I hadn't formed an opinion against the machine. I was willing to try it upon its merits.

Cross-int. 86. You had not asked to have it placed in your shop, but had assented to the company's request, I suppose?

Ans. Yes, sir; that is the way of it.

Direct examination resumed:

Int. 87. Did you see any buttons that were sewed on by said Morley machine while it was operating in your shop unraveled, as you call it?

Ans. I did.

Int. 88. Buttons on how many different shoes?

Ans. I am not able to state definitely; I think I saw the operator unravel them on three or four different occasions.

Int. 89. Did you see any specimens of the Morley work before hearing of or seeing the Lancaster work?

Ans. Yes, sir; I did.

Int. 90. During the two days the Morley machine was in operation in your shop were you or not present in the same room in which the machine was operating?

Ans. I was present.

Int. 91. How many different rooms in your shop?

Ans. But one room.

Int. 92. Is a button-sewing machine in demand among manufacturers?

Ans. From my observations, I think it is.

HARNDEN H. JENNINGS.

Attest: FREEDOM HUTCHINSON,
Special Examiner.

110 *Deposition of Albert H. Sawtell.*

Nov. 1, 1883.

Direct examination by GEORGE E. SMITH, Esq., of counsel for defendant:

Int. 1. What is your name, age, residence, and occupation?

Ans. Albert H. Sawtell. I am thirty-seven years old. I reside in Lynn, Mass. I am a salesman and superintendent.

Int. 2. Have you ever learned the iron machinist's trade; and, if yes, how long have you been employed upon machines and machinery in various capacities?

Ans. I have; I have been so employed about twelve years.

Int. 3. In what manner and by whom are you now employed?

Ans. I am employed as salesman and superintendent by the Standard Button Fastening Company, at Lynn, Mass.

Int. 4. What is the business of that company?

Ans. Manufacturing machines for fastening buttons to boots, shoes, and various materials.

Int. 5. Have you ever seen the button-sewing machine used by Charles B. Lancaster, the defendant, in his factory in Lynn?

Ans. I have.

Int. 6. Do you know who made or manufactured that machine? And, if so, state.

Ans. I do not know.

Int. 7. State whether or not said Lancaster machine is like or similar to the machines manufactured by the Standard Button Fastening Company.

Ans. It is similar.

Int. 8. State whether or not you have ever been in the employ of the Morley Sewing Machine Company, the plaintiff in this case; if so, when and how long.

Ans. I have; about a year and ten months, ending in February, 1883.

Int. 9. When did you commence your employment with the Standard Button Fastening Company?

Ans. In February, 1883.

111 Int. 10. While in the employ of the Morley Sewing Machine Company, please state what business you attended to.

Ans. I attended to placing on trial among shoe manufacturers and repairing their button-sewing machines.

Int. 11. Have you with you and will you produce and attach to this deposition any samples of work which you saw sewed on the Morley machine? And, if so, state when and where they were sewed.

A. I have such samples, and I saw them sewed yesterday, Oct. 31, 1883, at the factory of Fogg, Shaw & Thayer, in Marblehead, Mass. I will produce them and annex them to this deposition, and the same are marked "Defendant's Exhibit of Morley Work Performed on Machine in Factory of Fogg, Shaw & Thayer, at Marblehead, Mass., Oct. 31, 1883, F. H., special examiner."

Int. 12. Who operated said machine when said samples were sewed?

Ans. Their regular operator.

Int. 13. State whether or not the buttons or stitches have been changed in any manner since the buttons were sewed on by the operator in said factory.

Ans. They have not.

Int. 14. Do you know whether or not by pulling the thread through the last loop made on said samples the stitches thereon can be raveled?

Ans. They can.

Int. 15. Have you ever experimented on other similar samples or stitches?

Ans. I have.

Int. 16. What becomes of the buttons when said thread is pulled as above inquired of?

Ans. The buttons drop off.

Int. 17. On some of said samples a button is missing. State whether any button was sewed on by said machine at the place where the button is now off.

Ans. There was not.

Int. 18. Do you know the reason why not? And, if so, give the reason.

112 Ans. Yes; the button failed to feed down to the needle.

Int. 19. Suppose you pull the loop or thread sticking up on said samples where the button is missing, what will be the result?

Ans. The stitch will ravel.

Int. 20. Have you with you and will you produce and annex to this deposition a sample or samples of work which you saw done on the Lancaster machine?

Ans. I have. I will produce and so annex the same, and they are marked "Defendant's Exhibit of Samples of Lancaster Machine Work, F. H., special examiner."

Int. 21. Do you know whether the ends of the thread after stitching on a row of buttons by each machine have to be fastened or sewed by hand in any way?

Ans. The ends on the Morley machine have to be fastened by hand; the Lancaster do not have to be fastened by hand.

Int. 22. Taking one of the samples of Lancaster button stitching, will you please cut the thread on the inside of the leather on each side of a button and pull on the button and state what the result is.

Ans. I have so cut the thread, and the result is you cannot get it off.

Int. 23. Please pull upon the ends of the thread so cut and state what is the result.

Ans. the result is to tighten the button again.

Int. 24. Will it or not ravel the stitch?

Ans. It will not.

Int. 25. Have you with you and will you produce a sample of buttons which you saw sewed on by hand?

Ans. I have and will, and the same is annexed to this deposition and marked "Defendant's Exhibit of Button Sewing by Hand, F H., Spec. Ex."

Int. 26. Have you with you and will you produce two samples, one sewed on the Morley machine and raveled out, and the other sewed on the Lancaster machine and the thread drawn out, and have you also a thread used in making the stitch on each of said samples?

(26 objected to by plaintiffs' counsel as irrelevant.)

Ans. I have and will produce the two samples and thread.

113 Int. 27. Please state how, if at all, said two samples are marked by you.

Ans. The Morley sample is marked "Morley stitch, Oct. 31st, '83, A. H. S., 32 inches thread, 10 buttons."

The Lancaster sample is marked "Standard stitch, Oct. 31st, '83, A. H. S. 20¾ inches thread, 10 buttons."

Int. 28. Will you annex said samples to this deposition?

Ans. I will, and the same are marked "Deft's Exhibit of Samples, one sewed by Lancaster machine and the other sewed by Morley machine and raveled by Mr. Sawtell, and referred to in his answer to Int. No. 26, F. H., Spec. Ex."

(Plaintiffs' counsel objects to annexing the samples.)

Int. 29. How many buttons are sewed upon an ordinary size ladies' button boot?

Ans. Ten buttons.

Int. 30. How do these samples compare in length with the button quarter of said boots?

Ans. They are the same length as a ten-button boot.

Int. 31. Have you measured the thread used in stitching on the ten buttons in each of said samples?

Ans. I have.

Int. 32. Give the length of each.

Ans. The length of the Morley thread is thirty-two inches, the length of the Standard is twenty and three-fourths inches.

Int. 33. Please state the difference in the length of thread used in sewing on a case of sixty pairs of ladies' ten-button boots by the Morley and Lancaster machines.

Ans. The difference is thirty-six yards and twenty-four inches.

Int. 34. Can you state the cost of thirty-six yards and twenty-four inches of thread of the grade or quality used in those samples? If so, please state it, giving the kind or name of the thread.

Ans. I can; the cost is two and forty-eighth seventy-fifths cents; the thread is "five-cord twenty-five black super."

Int. 35. Do you know which takes the larger quantity of thread in sewing on buttons, the Lancaster machine or hand work? If so, state.

114 Ans. I don't know positively, but think hand work.

(Adjourned.)

Nov. 7, 1883.

Cross-examination by AMBROSE EASTMAN, Esq., of counsel for complainants:

Cross-int. 36. What is your position in the Standard Button Fastening Company?

Ans. I am employed by them as salesman and superintendent?

Cross-int. 37. How long have you been superintendent?

Ans. Since the 22d of February last.

Cross-int. 38. What is Mr. Matherson's position in the company?

Ans. He is superintendent of the manufacturing of the machines.

Cross-int. 39. That is the card of the company, is it not?

Ans. It is; hereunto annexed and marked "Exhibit Card of Standard Button Fastening Co., F. H., Spec. Ex."

Cross-int. 40. When did you arrange with the Standard Button Fastening Company to go into its employ?

Ans. Some time in February, 1883.

Cross-int. 41. How early in February?

Ans. I couldn't give exact date; some time in the forepart of the month. I couldn't give anything definite.

Cross-int. 42. When did your negotiations with them begin?

Ans. Some time the forepart of February.

Cross-int. 43. Was no proposition made you by them relative to going into their employ before Feb. 1?

Ans. Not to my recollection.

Cross-int. 44. After agreeing in the early part of February, as you say, to go into their employ, did you continue in the employ of the Morley Company?

Ans. I did.

Cross-int. 45. Did you not tell Mr. Sinclair, the treasurer of the Morley Company, and Mr. Cook, its president, about the time you left their employ, that you were going to work in your father's mill?

115 Ans. I had two jobs in consideration at that time and that was one of them.

Cross-int. 46. Did you not tell them at that time that you had accepted your father's proposal to go with him?

Ans. I don't recollect as I did.

Cross-int. 47. Are you willing to state on oath that you did not?

Ans. I have no recollection of doing it, as I had made no definite arrangements at that time.

(Objected to as irresponsive by complainants' counsel.)

Cross-int. 48. (Int. 47 repeated.)

Ans. I shall answer it as I did before.

Cross-int. 49. Are you willing to state on oath that you did not?

Ans. I answer the same as before.

Cross-int. 50. Are you willing to state on oath that you did not?

Ans. My answer is the same as before.

Cross-int. 51. Are you willing to state on oath that you did so tell them?

Ans. I don't recollect, as I had made no definite arrangements with either party at that time.

Cross-int. 52. Did you not tell Mr. Cook and Mr. Sinclair, just before you left the employ of the Morley Company, that you were going into employ at your father's mill or into business with him, and give as a reason for it that your father had put in an engine into the mill, because you would not otherwise go, and that therefore you must go, as you had agreed to?

Ans. I have no recollection of telling them that I had agreed to go.

Cross-int. 53. Did you not tell them at that time that you had agreed to go into business with your father?

Ans. I have no recollection of telling them that I had agreed to.

Cross-int. 54. Had you not agreed with your father that if he would put in the engine to supply lack of water power at the mill you would go into business with him?

Ans. That was a proposal that he made that I had under consideration at that time. I had not so agreed with him at that time.

Cross-int. 55. Did you not represent to Messrs. Cook and
116 Sinclair in their office, 147 Congress street, Boston, that you had made such agreement with your father?

Ans. I don't recollect as I told them that I had made any such agreement. I told them that I had that offer from him, and that it was under consideration.

Cross-int. 56. During your employ by the Morley Company did you not go to Lynn and examine the Lancaster machine at the request of Mr. Sinclair, treasurer of the Morley Company?

Ans. I did.

Cross-int. 57. Did you not report to Mr. Sinclair, with Mr. Cook, Mr. Burley, and Mr. Morley, after that visit, at the company's office, 119 Summer street, that in your opinion the Lancaster machine was an infringement on the Morley patent?

Ans. I have no recollection of any such thing.

Cross-int. 58. You recollect Mr. Sinclair sending you there, don't you?

Ans. I recollect Mr. Sinclair requesting me to go and see the machine.

Cross-int. 59. What report did you make to him?

Ans. It would be impossible for me to state, as I don't recollect.

Cross-int. 60. About what time did you make this inspection of the Lancaster machine?

Ans. I couldn't tell. I have no means of knowing.

Cross-int. 61. You remember reporting to Mr. Sinclair, don't you, after inspecting the machine?

Ans. I remember of having a conversation with them in the office, but I cannot recollect what it is.

Cross-int. 62. What was your opinion at that time as to whether it infringed or not?

Ans. My opinion at the time, if I remember correctly, was that I thought it did in some points.

Cross-int. 63. Did you not specify to these gentlemen at that time

the points wherein you thought the Lancaster machine infringed the Morley patent?

Ans. I might have done so, but I don't recollect what they were.

Cross-int. 64. While you were in the employ of the Morley
117 Company did you not make daily reports in writing to the company?

Ans. I did.

Cross-int. 65. These reports were in a book form or diary, were they not, and left with the company when you went out of its employ?

Ans. They were.

Cross-int. 66. Shortly before leaving the company's employ did you not in your daily report state that on Jan. 8, 1883, you had visited the shops of Joseph Harris & Sons, of J. M. Cropley & Bro., of John Collins, and of F. M. & J. M. Munroe at Marblehead, and report the machines all right, when in fact you had not been there that day?

(Objected to by defendant's counsel as irrelevant.)

Ans. If I made such a record in the book I was there.

Cross-int. 67. Did you ever write a letter to the Morley Company while in its employ in which you stated that the Lancaster machine was an infringement of the Morley patent and was a failure?

Ans. I might have done so, but I don't recollect.

Cross-int. 68. Where were you employed prior to your connection with the Morley Company?

Ans. In Holyoke, Mass.

Cross-int. 69. Mr. M. H. Whitcomb was your immediate employer, was he not?

Ans. He was, as superintendent of the company.

Cross-int. 70. How long were you employed there?

Ans. About three years.

Cross-int. 71. Did you have any difficulty with Mr. Whitcomb or the company?

Ans. I did not.

Cross-int. 72. In the use of the Lancaster machine is there not sometimes difficulty in the buttons feeding down to the needle?

Ans. But very little.

Cross-int. 73. But it occasionally happens, does it not?

Ans. If by accident, through poor buttons.

Cross-int. 74. Do the Lancaster machines ever give trouble by getting out of order?

118 Ans. But very little; not nearly as much as the Morley machine.

Cross-int. 75. In the stitch of the Lancaster machine, how many threads pass through the eye of the button?

Ans. Two threads pass through the eye of the button.

Cross-int. 76. In the work of the Morley machine, if a thread breaks after stitching or is cut between the buttons after a line of buttons has been sewed on, are the buttons loosened unless the thread is raveled out by hand?

Ans. They are; by taking hold of the button you find it loose.

Cross-int. 77. Would the buttons in this case be any more loosened than they would be on hand-sewed shoes, if the thread is cut in the same way?

Ans. That depends upon the way they are sewed; there are various ways of sewing buttons by hand.

Cross-int. 78. In the ordinary hand-sewed work?

Ans. In what I call the ordinary hand-sewed work there would be but very little difference.

Cross-int. 79. How does the strength of the Morley stitch compare, in your judgment, with the stitch in what you call the ordinary hand-sewed work?

Ans. Using the same quality of thread, in my judgment, the stitch of the hand-sewed would be the strongest.

Cross-int. 80. Did you ever test them, one as against the other?

Ans. I have, many times.

Cross-int. 81. In those tests, what did you find as regards the comparative strength—I mean the ordinary hand-sewed work?

Ans. I found that in testing them the stitch sewed by hand was made in such a manner as to be stronger than the one made by the Morley machine.

Cross-int. 82. What was your method of test?

Ans. In the ordinary way of trying them by hand.

Cross-int. 83. Did you pull each without cutting or raveling the thread on either until the button came off?

Ans. I neither raveled nor cut the thread in any form, and I pulled them until the button came off.

Cross-int. 84. Were any of these tests made while you were in the Morley Company's employ?

119 Ans. They were; all of them.

Cross-int. 85. Did you not report repeatedly to Mr. Cook, Mr. Sinclair, Mr. Burley, and to your customers that the Morley stitch held the buttons on more firmly than hand work?

Ans. I might have done so; that would have been a matter of business.

Direct examination resumed:

Int. 86. In the Morley stitch how many threads pass through the eye of the button?

Ans. Two.

Int. 87. Can hand-sewed work be raveled by simply pulling the end of the thread?

Ans. It cannot.

Int. 88. In your observation of the Morley machine did you or not find any difficulty with the feeding of buttons to the needle; and, if so, what?

Ans. I did, considerable. The difficulty was to get the buttons to feed from the cup down to the raceway and from the mouth of the raceway to the needle; and all buttons had to be sorted before used.

Int. 89. Where did the manufacturers using the Morley machines obtain their thread and buttons, if you know?

Ans. They bought them of the Morley Company?

Int. 90. And why, if you know?

Ans. The Morley Company wished to furnish them because they wanted to pick the buttons over and have them right and have as little trouble as possible.

Int. 91. Suppose a button without an eye passes into the raceway of the Morley machine, what becomes of it?

Ans. It drops down into the button finger and the needle fails to take it from there.

Int. 92. And is there a button missing in the row that is being stitched on or is another button fed to the needle before the leather or shoe is fed to the next button point?

Ans. There is a button missing.

Int. 93. In the Lancaster machine, if a button without an eye drops into the raceway what becomes of it?

120 Ans. It falls out of the side of the raceway before reaching the needle.

Int. 94. Are the buttons used in the Lancaster machine sorted before use?

Ans. They are not.

Cross-examination resumed:

Cross-int. 95. In the case you speak of in your ninety-first and ninety-second answers of a button without an eye coming down the raceway, would not an attenti[ve] operator easily supply a perfect button by simply putting it over the needle and then sew it on in the usual way?

Ans. She could by stopping the machine.

Cross-int. 96. When the buttons are assorted the occasion very rarely happens, does it?

Ans. It does very rarely happen.

Cross-int. 97. While you were connected with the Morley Company do you mean to state on oath that all the manufacturers who used their machines bought their thread and buttons of the Morley Company?

Ans. As far as my recollection goes, they did. I was so instructed to advise them to do so.

Cross-int. 98. Isn't it a fact that many of them bought their thread and buttons of dealers at large?

Ans. I am not positive. I have no means of knowing, but I think not.

Cross-int. 99. Did the Morley Company charge any more than the market price for the thread and buttons which they furnished to customers using their machine?

Ans. That I could not tell.

Cross-int. 100. What is the average number of pairs of boots button-sewed in a day by hand-work operators?

Ans. About ninety pairs, I should say, of women's.

Cross-int. 101. While you were employed by the Morley Company how large a number of pairs have you known to be button-sewed in a day on one of the Morley machines?

Ans. I knew of one operator, if I am not mistaken, that
121 sewed on sixteen cases and some odd pairs, making nine hundred and sixty and some odd pairs.

Redirect examination resumed:

Int. 102. Can you tell the average number of pairs, taking the Morley machines as they run in factories, sewed on in one day?

Ans. As near as I can recollect, the average would be about four hundred and twenty pairs.

Int. 103. Did the operator sewing on the nine hundred and sixty-odd pairs have any assistance in her work; and, if so, what?

Ans. I think she had her work brought to her and taken away.

Int. 104. Did she fasten the ends of the thread after sewing on a row of buttons?

Ans. I couldn't positively state.

Int. 105. How large a number of pairs have you known sewed on the Lancaster machine in one day?

Ans. 1,044 pairs, making seventeen cases and twenty-four pairs.

Int. 106. What size of shoe and how many buttons on a shoe?

Ans. They were women's shoes and they would all average ten buttons, twenty to the pair.

Int. 107. What is the average number of cases per day on the Lancaster machine?

Ans. Eight cases.

Int. 108. Referring to the ninety-fifth question, would you say an attentive operator could stop the machine running at full speed after the button without an eye was fed out of the raceway and before the needle came up through the leather?

Ans. I should say she could not.

Int. 109. Could she see whether the button had an eye or not before it was delivered out of the raceway?

Ans. She could not.

Int. 110. What is the average cost of the labor per case of sixty pairs for sewing on buttons by hand?

Ans. As near as I can tell, I should say about eighty-four cents.

ALBERT H. SAWTELL.

Attest: FREEDOM HUTCHINSON,
Special Examiner.

122 *Deposition of Frank Bridgham.*

Nov. 9, 1883.

Direct examination by GEORGE E. SMITH, Esq., of counsel for defendant:

Int. 1. What is your name, residence, age, and occupation?

Ans. Frank Bridgham; 13 West Baltimore street, Lynn, Mass.; thirty-five; shoe-stitcher at 40 Almont street, Lynn.

Int. 2. About how many hands do you employ, if any, and about how many cases do you sew on annually in your shop?

Ans. I have from forty to sixty hands, and about twenty cases a day. I should say it would be 3,000 cases of sixty pairs each.

Int. 3. Will you explain, as near as you can, exactly what work you do on the shoe?

Ans. I take it from the cutter and fit it right through for the laster.

Int. 4. Does your work on the shoe uppers include making the button-holes and sewing on the buttons?

Ans. It does.

Int. 5. Have you ever used in your shop any button-sewing machine; and, if so, whose was it and when did you use it and about how long?

Ans. I have used the Morley machine in my shop. I think it was put in somewhere about the 20th of last October, and I think it was in there something like ten days.

Int. 6. Then, do you mean it was taken out about Nov. 1 of this year?

Ans. Let me change that a little. I think it must have been put in before the 20th. I have nothing to fix the dates when it was put in or when it was taken out, but I think about ten days is the time it was in there.

Int. 7. Who operated said Morley machine?

Ans. A lady by the name of Simpson, if I remember right.

Int. 8. Who employed her?

Ans. The Morley Company.

Int. 9. How often did you see the machine in operation while you were there?

123 Ans. Three to five times a day.

Int. 10. How many cases, if you know, were stitched on said machine each day?

Ans. I could not tell the exact number, but should think somewhere from two to five cases.

Int. 11. What advantages, if any, did you find in said machine over hand work?

Ans. Nothing more than that I could do it a little cheaper.

Int. 12. What disadvantages, if any, did you find in using said machine, as compared with hand work?

Ans. There was a disadvantage in sewing on the buttons before the shoe was vamped, which I did not like. It made a larger hole in the upper, and the buttons were liable to come off—all of them at one time.

Int. 13. Have you had buttons sewed on by the Lancaster machine, so called, or by the Standard Button Fastening Company; and, if so, when and about how many?

Ans. Yes; I could not tell how many or the exact time at which they commenced. I think they commenced some time in August, and have sewed them on up to the present time, more or less. They have sewed on, say, one hundred and fifty cases.

Int. 14. Have you seen that machine operate; and, if so, how many times?

Ans. Yes; perhaps a dozen times.

Int. 15. Have you examined the work which the machine has done for you?

Ans. Yes, sir.

Int. 16. With your observation and knowledge of the work of the Morley and Lancaster machines, which, in your judgment, is the better machine for sewing on buttons?

Ans. The Lancaster.

Int. 17. In what particulars is it better?

Ans. There is no way in which you can pull off the buttons. You pull off one button and the others won't follow. On the Morley it will. It doesn't take so much thread, and is a cheaper machine, I think, to run.

124 Int. 18. Which machine, in your judgment, makes the neater-looking stitch?

Ans. The Lancaster.

Int. 19. How long have you been in the shoe business in all capacities?

Ans. About fifteen years.

Int. 20. Why did you leave off using the Morley machine?

Ans. Because parties for whom I have done work objected to it.

Cross-examination by AMBROSE EASTMAN, Esq., of counsel for complainants:

Cross-int. 21. How many cases out of your annual work of three thousand pairs are button boots or shoes?

Ans. I meant that for the whole amount of button boots.

Cross-int. 22. During the ten days that you say the Morley machine was in your shop, how many hours per day was the operator running it?

Ans. Well, I shouldn't say she was over seven or eight hours.

Cross-int. 23. What is your full running time for a day's work?

Ans. Ten hours.

Cross-int. 24. Are you quite sure that she was running the machine as many as seven hours every day?

Ans. I could not say as to that. I should say she was in the shop seven hours a day, but whether she was at work or not I could not say, as I was not in the room all the time.

Cross-int. 25. Did you make any note of the time of her coming and going, or do you speak only from impressions?

Ans. I speak from impressions.

Cross-int. 26. Isn't the month of October what is known as a light month, with comparatively little to do in the stitching-room?

Ans. No, sir; it may be on some grades of work, Southern or Western. On New York and New England work it isn't.

Cross-int. 27. Did the operator have furnished her all the boots that she could do on the machine every day?

Ans. I don't know that she didn't.

Cross-int. 28. Do you know that she did have all the work she could do on the machine?

125 Ans. I do not, because there was sometimes I was out, and Mr. Carroll, a gentleman who worked for me, had given her work several times.

Cross-int. 29. What is the average number of pairs per day for button sewing by hand work?

Ans. Well, from seventy-five pairs to two cases—I should say ninety pairs—I mean a day of ten hours.

Cross-int. 30. Then, if the machine will do five cases, or three hundred pairs, in seven hours, there is a considerable economy in using it, as compared with hand work, is there not?

Ans. Yes; as far as getting the buttons on, there would be.

Cross-int. 31. In your twelfth answer you speak of a disadvantage in using the Morley machines because the buttons are sewed before the vamp is on. Is that a disadvantage which affects the market value of the shoes?

Ans. It depends a good deal upon the marking of the shoe, as to that.

Cross-int. 32. What do you mean by marking?

Ans. Marking the upper of the shoe for the girl to sew the buttons on.

Cross-int. 33. If the quarters have been properly marked before sewing the buttons on, and the vamp is properly put on, the shoes in this particular are as good in the one case as the other, are they not?

Ans. I should say they were.

Cross-int. 34. Did you have any difficulty with the shoes sewed on the Morley machine from this cause? I do not refer in this question to the stability of the buttons.

Ans. There were several cases which didn't come right.

Cross-int. 35. How many?

Ans. My attention was called by the vampers to some two or three cases.

Cross-int. 36. Were all the shoes in those cases irregular?

Ans. No.

Cross-int. 37. How many, on an average, do you think?

Ans. There might have been from ten to fifteen pairs in a case.

126 Cross-int. 38. Did you personally examine as many as ten or fifteen pairs in each case and find them irregular?

Ans. I would say that there were two cases in which I examined as many as that, and very nearly all of those were bad.

Cross-int. 39. Might not that have been the fault of the vamper or of the marker?

Ans. It was not the fault of the vamper, because she called my attention to it before the shoe was vamped. It might have been the fault of the marker. I know nothing about that.

Cross-int. 40. What was done with those shoes?

Ans. I had the vamper favor them what she could in vamping and let them go.

Cross-int. 41. Did they come back?

Ans. They have not as yet; those shoes go into the making-room and have not got through the packing-room and are not yet buttoned up.

Cross-int. 42. Do not irregularities like this occur in hand work when there has been careless marking?

Ans. There have been such things; that is an objection to the Morley machine, for they can't rectify after they are vamped.

Cross-int. 43. Can you in the hand work?

Ans. Yes, sir.

Cross-int. 44. How?

Ans. By taking the button off one or more and sewing them on.

Cross-int. 45. Can't you take off one or more buttons sewed on by the Morley machine and replace, sewing on by hand?

Ans. I suppose you could.

Cross-int. 46. Isn't that exactly what you would do in hand work?

Ans. Yes.

Cross-int. 47. Then, in the mere matter of taking off and replacing buttons, is there any disadvantage of the Morley machine?

Ans. I think there is.

Cross-int. 48. What is it?

Ans. There is this much: If there are half a dozen buttons sewed on that are wrong, there is liability of the whole being wrong.

127 Cross-int. 49. Will they come off unless you pull the ends of the thread?

Ans. I think they are liable to come off.

Cross-int. 50. Without pulling the ends of the thread?

Ans. The end of the thread is liable to get caught unless it is fastened. I should think the buttons would be liable to come off by pulling the next button.

Cross-int. 51. Then, that is pulling the ends of the thread, isn't it?

Ans. Not exactly.

Cross-int. 52. How does it affect the next button?

Ans. By pulling on the buttons to button the shoe up.

Cross-int. 53. Did you ever personally see a button taken off the shoe which had been sewed on by the Morley machine unless the end of the thread had been pulled?

Ans. There was one case of shoes that the Morley folks commenced to sew on and they were brought upstairs to vamp. I took hold of the last button that was sewed on and drew the thread through and then took hold of the thread and they all came off. I have.

Cross-int. 54. In the instance described in your last answer didn't you pull the thread to loosen the buttons?

Ans. No, sir.

Cross-int. 55. In the instance mentioned in your fifty-third answer had the end of the thread been secured by the operator after sewing on the last button?

Ans. I couldn't say that it had.

Cross-int. 56. If not, then the last button was not properly fastened in the usual way by the operator, was it?

Ans. I don't know that it wasn't.

Cross-int. 57. Do you think it was?

Ans. I should not want to say that I thought it was or was not.

Cross-int. 58. Was the thread secured after sewing on the last button in this instance in the way in which the sewing had been secured in other boots sewed on the machine?

Ans. I couldn't say.

Cross-int. 59. After this top button slipped off the thread you loosened all the others only by pulling the thread; am I right?

128 Ans. Yes, sir.

Cross-int. 60. Have you ever seen buttons loosened in the middle of the quarter without pulling the thread?

Ans. I don't know that I ever did.

Cross-int. 61. Who first showed you how to loosen buttons by pulling the thread?

Ans. I think it was one of the firm of E. W. & C. F. Moore who first spoke to me about it.

Cross-int. 62. How did the machine run while it was in the factory, so far as you know?

Ans. They had two machines there and the machinist was down several times.

Cross-int. 63. For what parties do you stitch shoes?

Ans. Harrison Newhall's Son, S. W. Kimball, William Porter, Ellis & Well, and several others.

Cross-int. 64. Which of these firms took the shoes button-sewed on the Morley machine?

Ans. Harrison Newhall's Son.

Cross-int. 65. Did Mr. Sawtell come to you in regard to the buttons sewed on by the Morley machine?

Ans. No, sir.

Cross-int. 66. Did you have any trouble with the coming off of buttons sewed by the Morley machine, except in the instance you mentioned?

Ans. There was one shoe this morning of which it was necessary to take the buttons off, and I found it quite convenient to take them off.

Cross-int. 67. With this exception and that of the shoe mentioned in the fifty-ninth answer, have you had any trouble from buttons coming off?

Ans. I have not as yet. I don't know what will be before the shoe gets through the work.

Cross-int. 68. Did you not state to Mr. Sinclair that the only objection you had to the machine was that the parties for whom you worked objected to the stitch, and that you would be glad to run it if their objection could be overcome, and suggest that he

129 should go and see them, giving the names of Harrison Newhall's Son and Kimball?

Ans. I have no recollection of making any such statement.

Cross-int. 69. Did you ever see Mr. Sinclair and have a conversation with him at more than one interview?

Ans. No.

Cross-int. 70. Were Mr. Simpson and Mr. Carroll present at that interview?

Ans. I don't think they were.

Direct examination resumed:

Int. 71. Do the ends of the thread have to be fastened in any manner after sewing on a row of buttons by the Morley or Lancaster machines, if you know?

Ans. I have seen it on the Morley, but have never seen it done on the Lancaster.

Int. 72. What kind or quality of shoes were button-sewed by the said Morley machine?

Ans. Principally a kid shoe, a few cases of grain, and one or two cases of glove calf.

Int. 73. Were they what could be called cheap, medium, or fine grade of shoes?

Ans. Medium.

Int. 74. And how did the machine work on the glove calf?

Ans. There was one case that they undertook to sew on and couldn't sew on and laid one side.

Int. 75. If a button-sewing machine did good work, or nearly as good work as hand-work, would it be in demand among manufacturers?

Ans. It would.

FRANK BRIDGHAM.

Attest: FREEDOM HUTCHINSON,
Special Examiner.

130 *Deposition of George W. Musso, Jr.*

Nov. 8, 1883.

Direct examination by GEORGE E. SMITH, Esq., of counsel for defendant:

Int. 1. What is your name, age, residence, and occupation?

Ans. George W. Musso, Jr.; thirty-two; Lynn, Mass.; boot and shoe fitter.

Int. 2. Please explain particularly what work you do on shoes, for whom you do it, and about how many hands you employ.

Ans. I do the boot and shoe fitting for the firm of John Shaw, 2d, & Bro., of Lynn. That includes the entire fitting of the upper, sewing on buttons, and making the button-holes. I employ about one hundred and twenty-five hands in the busy season.

Int. 3. Is the fitting of the shoe uppers, which you say you do, job work?

Ans. It is. I get so much per pair.

Int. 4. About how many cases of button boots annually do you fit or make for said firm?

Ans. About 3,500.

Int. 5. How long have you been engaged in said business?

Ans. Ten years.

Int. 6. Before that were you employed in any way in the manufacture of boots and shoes; and, if so, how long?

Ans. I was; about eight years. I commenced working on boots and shoes when about fifteen years old. When I was seventeen years old I had charge of a making-room for Murphy & Shepard, where they employed a hundred to a hundred and twenty-five hands.

Int. 7. Have you ever used in your stitching-room any button-sewing machine; and, if so, whose make was it, when, and how long did you use it?

Ans. I have. It was the Morley machine. I used it two years ago this month. It was there from two to three months. They operated it several weeks.

Int. 8. Who furnished the operator, thread, and buttons?

Ans. The Morley Machine Company.

131 Int. 9. Were you then in personal charge of your stitching-room?

Ans. I was.

Int. 10. How often did you see said machine in operation?

Ans. It was constantly under my supervision; I saw it every few minutes as I passed by.

Int. 11. How did the work done on said machine compare, in your judgment, with button sewing by hand?

Ans. I should prefer the hand work.

Int. 12. What objections, if any, did you have to the working of the machine or to the work performed on the machine?

Ans. There were several objections: First, the machine was liable to cut the upper too much; second, if not fastened on, the buttons were liable to rip off. The most serious objection of all was that the buttons had to be sewed on before the boots were vamped. I objected also to so much thread on the inside of the boot. There were three lines of thread.

Int. 13. Please explain what you mean by the machine being liable to cut the upper.

Ans. If the machine wasn't working well and missed buttons they had to sew them on over again, and very often it would be an impossibility to sew them on again in the exact spot at which the others were sewed on, which would make eight holes within a space of quarter of an inch, defacing the boot when sold by the retailer to the consumer if the buttons had to be changed.

Int. 14. In the operation of the machine did it or not often miss a button?

Ans. I have seen it miss buttons quite often, as all machines would be likely to, and I have seen it work quite smoothly for two or three hours.

Int. 15. How many holes are made by said machine in sewing on a button and how many by hand work?

Ans. Four by the machine and two by hand work.

Int. 16. Please explain why you consider it objectionable to sew on buttons before the shoe is vamped.

Ans. It is very unhandy for the operator, and if the buttons
132 are not on in the right place the fit of the upper is not perfect without changing the buttons.

Int. 17. Did you have any trouble with the row of buttons ripping or pulling off after the shoe was bottomed or while it was being bottomed?

Ans. My work is inspected thoroughly before it leaves the room, and when packing the uppers, if the end of the thread was not fastened off, sometimes they would start a button or two. I do not have charge of the bottoming or the packing.

Int. 18. After using the Morley machine on trial how did you have your buttons sewed on?

Ans. By hand.

Int. 19. Have you since had them sewed any other way; and, if so, how and where and why?

Ans. I have, by the Lancaster or Standard Button-Sewing Machine Company, at their place of business, in Lynn, because I considered it better and cheaper.

Int. 20. How many cases, as near as you can estimate, have you had sewed on the Lancaster or Standard machine?

Ans. Between 1,000 and 2,000.

Int. 21. In your judgment, how does the work of the Lancaster machine compare with hand work and with Morley machine work?

Ans. It is smoother and more even and, in my opinion, stronger than either.

Int. 22. Do the buttons sewed on by the Lancaster machine ravel or pull off?

Ans. I have never known them to.

Int. 23. Have you ever tried to pull off the button with the thread cut on each side of it?

Ans. I have.

Int. 24. What was the result?

Ans. I have torn the leather out where the button was sewed on.

Int. 25. Then do you consider the buttons independently fastened?

Ans. I do.

Int. 26. At the present time how much of your work is button-sewed by the Lancaster machine?

133 Ans. All of it.

Int. 27. Of the three ways of putting on buttons mentioned in the twenty-first interrogatory, by which method is the least thread used.

Ans. I think by the Lancaster machine.

GEORGE W. MUSSO, JR.

Attest: FREEDOM HUTCHINSON,
Special Examiner.

Deposition of John Franklin Harris.

Nov. 16, 1883.

Direct examination by GEORGE E. SMITH, Esq., of counsel for defendant:

Int. 1. What is your name, age, residence, and occupation?

Ans. John Franklin Harris, Jr.; thirty-two years old; I reside in Boston, Mass.; shoe manufacturer; a member of the firm of Joseph Harris & Sons.

Int. 2. Where is your factory and about how large a business do you do annually?

Ans. We have two factories—one at Marblehead, Mass., and one at Mechanics Falls, Maine. We do between $500,000 and $600,000 business annually.

Int. 3. How long have you been in the business of manufacturing shoes?

Ans. Ten years myself, and the firm thirty-eight years, I think.

Int. 4. What grade or quality of shoes do you make, and what kind?

A. Medium, ladies', misses', children's, boys,' and youths'.

Int. 5. About what portion of your boots and shoes are button boots and shoes?

Ans. A large proportion.

Int. 6. Have you ever, in either of your factories, used any button-sewing machine; and, if so, when did you use it, and how long a time, and whose make was it?

Ans. We used the Morley in our Marblehead factory; we used it about a year and gave it up about a year ago.

Int. 7. How many of the Morley machines did you have?

134 Ans. I think it was five.

Int. 8. Did you purchase or lease the machines; and, if so, at what price?

Ans. We did, at $150 each.

Int. 9. During the year which you say you used them in your Marblehead factory how much of the time were they all in operation, as near as you can recollect?

Ans. They were in operation pretty much all of the time, except when one of them happened to break down or when an operator left. I think they were not all put in at the same time. Some of them were there perhaps a little over a year and some not so long.

Int. 10. During the time they were in operation did you personally observe the working of the machines and examine the shoes button-sewed on the same?

Ans. I did.

Int. 11. Who of your firm had general charge or oversight of the Marblehead factory while the machines were there?

Ans. I had.

Int. 12. How do you sew your buttons on at the present time?

Ans. By hand.

Int. 13. Where are the five machines above mentioned?

Ans. They are boxed up in our shop at Marblehead.

Int. 14. Who furnished the operators to run said machines?

Ans. We did.

Int. 15. Who instructed them at first in their work?

Ans. Well, the Morley Button Machine Company sent operators at different times. We had two different women there. I don't know who they were. That is all I ever saw there. Then there was Sawtell used to be there sometimes, as often as once a week, and he had general charge of their machines—that is, as far as we were concerned.

Int. 16. Why did you cease to use them?

Ans. Because we were dissatisfied with the work.

Int. 17. In what particulars were you dissatisfied with the work?

Ans. Well, in general. In the first place, it made too large holes in sewing on each button, and it used a good deal of thread
135 underneath, which made it look heavy and coarse; then, again, in sewing on buttons before the shoe is vamped you get a good many buttons which have to be taken off and sewed on by hand. That leaves the shoe looking badly, because you have got the hole the machine made in sewing on the others.

Int. 18. What is the difficulty experienced in sewing on buttons before the shoe is vamped?

Ans. Well, if the quarters are not exactly even when the shoe is vamped it causes the button piece to draw when the shoe is buttoned up, and the quarter puckers.

Int. 19. Where did you get the buttons which you used on the Morley machines?

Ans. We got part of them of the Morley Company; the balance I got of M. M. Rhodes & Co., of Taunton, the parties they got theirs of.

Int. 20. Did you make any estimate at the time to determine the comparative cost of sewing on buttons by hand and by the Morley machine?

Ans. Yes; I did.

Int. 21. What was the comparative cost?

Ans. I figured the cost, taking everything into consideration, and the result was about ten per cent. in favor of the Morley machine.

Int. 22. And considering the fact that the cost is less on the Morley machine as you estimated than by hand work, which way of sewing on buttons do you, as a manufacturer, prefer?

Ans. Well, that question is answered about the same as one of the first; it was the unsatisfactory nature of the work that caused us to give it up, and we preferred to sew the buttons on by hand. If the work had been satisfactorily done it would have induced us to keep the machine on account of saving expense.

Int. 23. Have you ever used any other machine or seen any other button-sewing machine operate?

Ans. I have not.

Int. 24. Will you please examine defendant's exhibit of samples of Lancaster machine work put in this case by Mr. Sawtell and re-

ferred to in his deposition and say which, in your opinion, shows the neater and better stitch, the sample which you are examining or the stitch made by the said Morley machines in your factory?

136 (Objected to by complainants' counsel.)

Ans. There is no doubt about it; this sample is very neat work and the other was very coarse work.

Int. 25. How does the sample shown you compare in appearance with hand work?

(Objected to as wholly irrelevant and incompetent.)

Ans. Well, about the same.

Cross-examination by AMBROSE EASTMAN, Esq., of counsel for complainants:

Cross-int. 26. Did the five machines which you leased of the Morley Company all come at the same time?

Ans. No, sir.

Cross-int. 27. How many came at first?

Ans. I think one.

Cross-int. 28. How long did you use that before ordering a second?

Ans. Not a great while.

Cross-int. 29. How long those two before ordering a third?

Ans. I think the second and third came at the same time.

Cross-int. 30. If the first experimental machine was unsatisfactory, what induced you to continue ordering new machines?

Ans. Well, we were making a great many more button boots at that time than we could get the buttons sewed on by hand, and it wasn't a question with us what we paid for the machine so much, so that we charged the money that we paid for the lease of the machines to profit and loss.

Cross-int. 31. You continued to run them about a year, did you not?

Ans. Yes, sir.

Cross-int. 32. How many shoes per day of ten hours would each machine sew the buttons upon?

Ans. A good operator would sew on the machine from eight to ten cases, making from six hundred to seven hundred pairs, averaging fifteen buttons to the pair.

Cross-int. 33. What would be the average work of a girl sewing on buttons by hand for the same time?

137 Ans. From one hundred and eighty to two hundred and sixteen pairs of the same boots.

Cross-int. 34. An unskilled girl sewing on by hand would fall much below this average just as an unskilled operator on the machine would fall below the average, would she not?

Ans. Not in the same proportion, although she would fall below.

Cross-int. 35. What would you consider a fair average work of an unskilled beginner per day when sewing on by hand?

Ans. For the first week, seventy-two pairs per day.

Cross-int. 36. Do you not have trouble with beginners' work in sewing on by hand from misplaced or loosely sewed buttons?

Ans. Once in awhile, but not much more than with experienced old operators.

Cross-int. 37. Is not all hand work imperfect in some proportion?

Ans. Not any more than the machine; all hand work, of course, is imperfect in some respects.

Cross-int. 38. In your twenty-first answer you say that you figured the cost of machine work as compared with hand work and the result was about ten per cent. in favor of the Morley machine; please state in detail how you figured out the comparison.

Ans. In the first place, into the cost of the Morley Button Company comes the royalty, then the price per cent. paid the operator, the extra amount of thread over what it took to sew on by hand, and the waste of buttons; another thing is the cost of marking, which has to be done for the machine.

Cross-int. 39. Did you take into account the original license fee?

Ans. Not in a specific way in that case.

Cross-int. 40. Did you pay your operators by the day or by the piece?

Ans. As learners, we had to pay them by the day.

Cross-int. 41. How did their wages compare by piece work with the wages paid girls who sew on by hand?

Ans. Slightly in favor of the girl on the machine.

Cross-int. 42. What price per case of equal size did you pay each class of operators?

138 Ans. What we paid the hand operators thirty cents, thirty-five, and forty cents for we paid the machine operator fifteen cents for.

Cross-int. 43. Did you lose the sale of many boots or shoes from coming off of buttons sewed on by the Morley machines?

Ans. Not any that I know of.

Cross-int. 44. If the machines were run by skilled operators could not the work be done at less price than fifteen cents per case and give the operator good wages?

Ans. It is pretty hard to get girls that are skilled to do it at that price, from the fact that girls on other kinds of machines equally skilled and working the same number of hours that it requires a girl to do on the Morley button machine eight to ten cases of seventy-two pairs each will make from $2.00 to $2.50 per day.

Cross-int. 45. Your objection to the work turned out by the Morley machines applies rather to the looks of the work, then, than to any unsalable quality, does it not?

Ans. Yes.

Direct examination resumed:

Int. 46. And is the looks of a boot an important or unimportant quality affecting its sale?

Ans. Well, looks has a good deal to do with its sale.

Int. 47. Do you sell your boots to jobbers or to retailers?

Ans. Principally to jobbers.

Int. 48. In answer to cross-int. 30 you say, "It wasn't a question with us what we paid for the machines;" please explain, then, what the main question was.

Ans. To get the work done.

Int. 49. On the average, how many pairs per day were button-sewed on a Morley machine?

Ans. I should say from three hundred and sixty to four hundred and thirty-two pairs of fifteen buttons.

Int. 50. Please explain what you mean in your answer to cross-int. 38 by the term "waste of buttons."

Ans. The snapping off of one button every time the machine is started.

JOHN FRANKLIN HARRIS, JR.

Attest: FREEDOM HUTCHINSON,
Special Examiner.

139 *Deposition of Mary E. Howe.*

BOSTON, *Dec.* 17, 1883.

Direct examination by GEORGE E. SMITH, Esq., of counsel for defendant:

Int. 1. What is your name, age, residence, and occupation?

Ans. Mary E. Howe; twenty-eight; Lynn, Mass.; I operate a button machine.

Int. 2. How long have you been engaged in operating a button-sewing machine, and what machines have you so operated?

Ans. A little over a year; a year and five months. I have operated the Morley machine and the Lancaster machine.

Int. 3. Where, for whom, and how long a time did you operate a Morley button machine?

Ans. In Beverly, Mass., for Seth Norwood & Co., from the last of July, 1882, to the first of March, 1883.

Int. 4. Since March, 1883, where have you operated a machine, and whose make of machine was it?

Ans. In Lynn, Mass.; the Lancaster machine.

Int. 5. During the time you operated a machine for Seth Norwood & Co., as stated, how many different Morley machines did you use?

Ans. Two.

Int. 6. From July, when you commenced, how long a time did you use the first machine?

Ans. Until the first of September following.

Int. 7. How did that first machine operate?

Ans. Not very good; it worked very bad on some of the work.

Int. 8. On what kind of shoes did it work badly?

Ans. Principally serge.

Int. 9. How did it work on kid boots?

Ans. Very fair.

Int. 10. What was the difficulty in operating on the serge goods?

Ans. You couldn't regulate the tension so but what it would pucker the work all up.

140 Int. 11. State whether or not you had any trouble with the tension in sewing on the kid boots.

Ans. Yes, sir; I had to have my tension tight or else the machine would not run, and if it was tight the thread would break.

Int. 12. Was there any trouble with the button-feeding apparatus; and, if so, what?

Ans. Yes, sir; a great deal, partly in the button not coming down from the button cup through the feeder, and the rest in the button finger not taking the buttons.

Int. 13. After receiving the second machine in September, 1882, what, if any trouble, did you have with that?

Ans. Some parts of the machine would work better than the other, and some about the same.

Int. 14. How did the second machine work on serge goods?

Ans. No better than the first one.

Int. 15. What part of the second machine give the most trouble?

Ans. The tension and cast-off bar.

Int. 16. Who attended to repairing the machine?

Ans. Parties that the Morley Company would send from Boston.

Int. 17. Please state about how often parties were sent from Boston to alter or repair the machines.

Ans. Sometimes three or four times a week, and at other times not more than once or twice.

Int. 18. Please give the names, if you can, of any parties who came down to repair the machines.

Ans. Mr. Morley, Mr. Bennett, and Mr. Sawtell.

Int. 19. State whether you attempted to keep the machines in repair and operation so far as you were able.

Ans. Yes, sir.

Int 20. State whether or not, after sewing the buttons on each shoe, the ends of the thread had to be fastend in any manner; and, if so, how.

Ans. Yes, sir; they had to be fastened; we used to pull down one end of the thread with a pair of pliers.

Int. 21. State whether or not you had any trouble with the buttons sewed on by the Morley machine pulling off or raveling.

Ans. Yes, sir; a great deal.

141 Int. 22. At what times in the process of manufacturing did the trouble occur?

Ans. Sometimes my thread would break and I wouldn't know anything about it until the shoe got to the vamper; then if she saw that if any of the buttons were off she would bring it back before she vamped it; if so, I could put them on with the machine; if not, I would have to sew them by hand. Then I had a great deal of trouble with the shoes coming back from the packing-room with the buttons off; sometimes I have had forty or fifty pairs out of sixty to put buttons on to.

Int. 23. When were the shoes buttoned up after leaving you, and how many times?

Ans. Once after the vampers had them and after they went from the lasters to the packing-room, making twice in all.

Int. 24. Did you sew the buttons on after or before the shoe was vamped?

Ans. Before.

Int. 25. Could they be sewed on after?

Ans. No, sir.

Int. 26. During the time you operated the Morley machines can you state about the average number of cases per day on each machine?

Ans. On the first machine they averaged about four, on the second about six, or sixty pairs each, and about eighteen buttons to a pair, on an average.

Int. 27. What was the largest number of shoes you did on either of said Morley machines on any one day?

Ans. Sixteen cases and twenty pairs of sixty pairs each.

Int. 28. What kind of shoes were they, and how many buttons to the shoe? Also state, if you can, the total number of buttons sewed by you that day.

Ans. Some of them were misses', and they averaged nine hundred and fifty buttons to sixty pairs, and the rest were women's, and they averaged one thousand and eighty buttons to sixty pairs. The number I sewed on was somewhere about sixteen thousand eight hundred buttons; a few over; I don't know just how many.

142 Int. 29. Please state how you happened to do so large a day's work and how many hours you were employed in doing it.

Ans. My machine had been out of order four days and I had all this work waiting for me. I was about ten hours and three-quarters doing the day's work.

Int. 30. Since March, 1883, have you been continually employed operating the Lancaster machine?

Ans. Yes, sir.

Int. 31. Have you operated more than one at different times; if so, how many?

Ans. Yes, sir; I can't tell just exactly; I have run two or three different ones in the office and one now at Mr. Bridgham's.

Int. 32. How have those machines operated, or what trouble, if any, have you had with them?

Ans. They have operated very good; we have had but very little trouble with them.

Int. 33. State whether or not the tension of the Lancaster machines has troubled you and whether you can sew buttons on serge goods with them.

Ans. We have had no trouble with the tension and we can sew buttons on serge goods as well as any other.

Int. 34. Can you state the average number of pairs or cases which you have sewed on per day by the Lancaster machine? If so, state.

Ans. I can; about eight, I think.

Int. 35. What is the largest day's work you have done on the Lancaster machine?

Ans. Seventeen cases and twenty-four pairs—sixty-pair cases.

Int. 36. What kind or size of boots were they, and what was the total number of buttons sewed, if you can tell, and how many hours were you employed?

Ans. Women's shoes; the total number was nearly twenty-three thousand. I worked nine hours and twenty minutes.

Int. 37. Give the circumstances of your doing that day's work.

Ans. We had a plenty of work in the office, and for two days before I had done fifteen cases each day, and that day I didn't think anything about my day's work till about the middle of
143 the forenoon, and then I thought I would try and see what I could do, as my work was going very good; and then at night I got my work to see how much I had done and found that I had done the seventeen cases and twenty-four pairs.

Int. 38. Which machine, the Lancaster or Morley, is operated the more easily?

Ans. The Lancaster.

Int. 39. With your experience operating both machines and with plenty of work in both cases, please state how many cases you can do on the Lancaster machine as quickly and easily as you can do six on the Morley.

Ans. I think I could do about ten.

Cross-examination by AMBROSE EASTMAN, Esq., of counsel for complainants:

Cross-int. 40. Had you been employed in sewing buttons on boots by hand before operating the Morley machine?

Ans. No, sir.

Cross-int. 41. What had been your employment?

Ans. Vamping shoes.

Cross-int. 42. You had had, then, no experience in button sewing, but took up this as a new business, did you not?

Ans. Yes, sir.

Cross-int. 43. Do you know what is the average work done per day by an operator sewing buttons by hand?

Ans. I think about ninety pairs.

Cross-int. 44. Who was your instructor on the machine, and how long?

Ans. A Miss Dennett. I don't know her first name. One day and one-half.

Cross-int. 45. How long had you been in the employ of Norwood & Co. before taking up this work on the Morley machine?

Ans. A little over one month.

Cross-int. 46. What was the occasion of your leaving them?

Ans. Because I let myself to the other button company and had a better situation than I had there.

144 Cross-int. 47. At what rate were you paid by Norwood & Co. for work on the machine?

Ans. Twenty cents for sixty pairs of boots.

Cross-int. 48. At what rate did they pay for button sewing on by hand?

Ans. Seventy-five cents for sixty pairs.

Cross-int. 49. Are they still running the machine?

Ans. I think they are.

Cross-int. 50. Did you keep any memorandum of the average number of pairs done on the Morley machine per day?

Ans. No, sir.

Cross-int. 51. Didn't you average more than four or six cases per day?

Ans. No, sir; I think not.

Cross-int. 52. Referring to your seventeenth answer, can you remember any week in which anybody came from Boston four times to repair the machine?

Ans. I can remember distinctly one week when three came, and I telephoned for some one to come, and the machine was out of order the fourth day because no one came.

Cross-int. 53. What week was that or what month?

Ans. I don't remember just what week it was. I can't tell exactly the month. I think it was in November or December, but I am not certain.

Cross-int. 54. Referring again to the seventeenth question, do you mean to state that some one was sent from Boston to repair the machine every single week that you ran it?

Ans. No, sir; not every week.

Cross-int. 55. Were there not a good many weeks when no one came to repair it?

Ans. There were but very few.

Cross-int. 56. Did it ever occur to you that a part of the trouble might be due to the inexperience of the operator?

Ans. No, sir; I made it a point in my business to study the machine thoroughly.

Cross-int. 57. Referring to your twenty-second answer, when
145 shoes were returned by the vamper and you sewed them on by the machine how many buttons would be off?

Ans. Sometimes two or three and at other times not but one, according to when the thread broke.

Cross-int. 58. The loss of a single button did not necessarily loosen the rest, did it?

Ans. It did if the thread was broken or if it started at the top.

Cross-int. 59. Did not the shoes come back to you at times with the thread broken midway of the shoe without loosening more than a single button?

Ans. No, sir; every button below where it was broken would come off.

Cross-int. 60. Without your pulling the thread?

Ans. Yes, sir.

Cross-int. 61. How about those above the break?

Ans. Those above the break were all right, because you cannot ravel a chain stitch the wrong way, above.

Cross-int. 62. Your production of four to six cases per day on the

machine was in spite of these occasional failures of the buttons, was it not?

Ans. Yes, sir.

Cross-int. 63. The price paid for sewing buttons on shoes upon the Morley machine by Norwood & Co. while you operated it was twenty cents per case, as against hand sewing at seventy-five cents, was it not?

Ans. Yes, sir; just for sewing the buttons on.

Direct examination resumed:

Int. 64. State whether or not there were other elements of cost to the manufacturer in using the Morley machine beside the twenty cents per case paid the operator.

(Objected to by counsel for plaintiffs because the witness has not qualified herself as an expert in the matter of manufacturing boots and shoes.)

Ans. Yes, sir; there were a great many.

Int. 65. Which takes the more thread or buttons, sewing by hand or by the Morley machine?

146 Ans. The Morley machine; both thread and buttons.

Int. 66. Who operated the first Morley machine in Norwood's factory before you commenced?

Ans. Miss Addie Peabody.

Int. 67. How did she get along with it, if you know?

Ans. She couldn't get along with it, and had to give it up.

MARY E. HOWE.

Attest: FREEDOM HUTCHINSON,
Special Examiner.

Deposition of Katie F. Flynn.

BOSTON, MASS., *Dec.* 31, 1883.

Direct examination by GEORGE E. SMITH, Esq., of counsel for defendant:

Int. 1. What is your name, age, residence, and occupation?

Ans. Katie F. Flynn; thirty-three years old. I reside in Lynn, Mass. My husband's name is Morris Flynn. I have charge of his stitching-room of boots and shoes.

Int. 2. What business does your husband do?

Ans. He manufactures boots and shoes.

Int. 3. Please state about the yearly amount or value of boots and shoes manufactured by him.

Ans. About $110,000 a year.

Int. 4. For how many years have you been in charge of his stitching-room, and for how long a time prior thereto have you been engaged in making boots or shoes?

Ans. I think about five years; about a year prior to that time I was engaged in the business.

Int. 5. Have you ever used in your husband's stitching-room any machine for sewing buttons on boots: and, if so, what machine?

Ans. I have used the Morley machine.

Int. 6. How many of the Morley machines have you used, and when?

Ans. Two machines. The first one I used about August and September, about six weeks, in 1882; the second was exchanged for that in October, 1883. I stitched about four cases of shoes on that one.

147 Int. 7. With whom did you make the exchange mentioned in your last answer, and why?

Ans. I made the exchange with the Morley Company, because I couldn't use the first one.

Int. 8. What was supposed to be the difference, if any, between the two machines?

Ans. The company stated that the second machine was the better machine.

Int. 9. State whether or not you were present in the stitching-room while the first machine was being operated.

Ans. I was present continually.

Int. 10. What, if any, objections did you find to the work and operation of the first machine?

Ans. If it should skip, by taking hold of the thread and pulling it all the buttons would come off the shoe; or, if the thread was not rightly fastened at the top of the boot, by pulling it all the buttons would come off, and if you wanted to sew them on again there would be four new holes in the stock, making eight holes; then the sewing on the buttons before it was vamped, you were not apt to get them on even and you could not do them after the shoe was vamped on that machine. You couldn't put the buttons on so that the customers would be suited with them, and I was obliged to go back to hand buttoning.

Int. 11. What do you mean by the words "if it should skip" in your last answer?

Ans. If the machine should omit to sew on a button.

Int. 12. How often did it omit to sew on a button?

Ans. That is rather a hard question. Like an ordinary sewing-machine running along it might skip on ten pairs and then run along and not skip on a dozen. I should say that it would be safe to say that it would skip a button on every six pairs or every ten pairs. Of course, I don't say that it did, but it would be safe to say it.

Int. 13. According to your best recollection, about how often did the machine skip a button?

Ans. I will say on every dozen pairs, because I am sure it did on every dozen pairs.

Int. 13½. Do you now sew buttons on before or after vamping?

148 Ans. After.

Int. 14. How do you sew your buttons on now?

Ans. By hand.

Int. 15. How many holes in the stock are usually made by sewing by hand?

Ans. Two.

Int. 16. As to the appearance of the stitch, which, in your judgment, looks better, the Morley or hand stitch, and why?

Ans. The hand stitch, because on the hand stitch you make but one line on the inside, while on the Morley machine you have three lines.

Int. 17. State whether or not the thread used on the Morley machine is waxed and whether the wax wears off after the boot is finished.

Ans. It is gum arabic that is used on the machine and it is used wet, and when it is dry it wears off before the boot is finished.

Int. 18. State whether it comes off on the lining, more or less.

Ans. The wet thread is apt to soil the lining.

Int. 19. Does your husband sell his boots to retailers or jobbers?

Ans. Both.

Int. 20. What part to each, as near as you can tell?

Ans. Five-sixths of our work goes to jobbers.

Int. 21. Did you have any trouble with buttons sewed on the Morley machine coming off after the shoe was ready to be packed?

Ans. Yes; there never was a case came through but what some of them had to be sewed on by hand.

Int. 22. State whether or not you have ever had any buttons sewed on by the Lancaster or Standard machine, so called.

Ans. Yes; I have.

Int. 23. Where were they sewed, and have you ever had a Lancaster machine in your factory?

Ans. They were sewed on in Mr. Sawtell's stitching-room in Lynn. We have never had a Lancaster machine in the shop.

Int. 24. Considering merely the strength and appearance of the stitch, which is the better, in your judgment, the Morley or the Lancaster stitch?

149 Ans. The Lancaster.

Int. 25. And in those particulars, how does the Lancaster stitch compare with hand work?

Ans. It is as near as you can get a stitch like hand work; it makes two holes in the boot, just like hand work.

Int. 26. State whether it is as strong as hand work, the same quality of thread being used in both cases.

Ans. I think it is equally as strong.

Cross-examination by AMBROSE EASTMAN, Esq., of counsel for complainants:

Cross-int. 27. Has your husband's business been a hundred and ten thousand dollars each year right along?

Ans. No; it is gradually growing up.

Cross-int. 28. How many cases of shoes have been button-sewed — the year 1882 in your shop?

Ans. I shouldn't want to answer without referring to my books.

Cross-int. 29. How many cases a day had buttons sewed on in 1882?

Ans. An average of five cases.

Cross-int. 30. How many pairs per day did your operator sew on by hand, on an average?

Ans. About ninety pairs.

Cross-int. 31. When you were running the machine how many pairs per day could be done on the machine?

Ans. The operator claimed she could do ten, but I never had ten for her to do.

Cross-int. 32. Was there any difficulty to the operator in doing the average of five cases per day on the machine?

Ans. No, sir; she could do five cases.

Cross-int. 33. Could she not also sew on any buttons that the machine skipped?

Ans. That was done by another person.

Cross-int. 34. What did you pay in 1882 for hand work in sewing on buttons?

Ans. Eight cents a hundred.

Cross-int. 35. How much for machine work?

150 Ans. I hired it done by the week.

Cross-int. 36. How much per case did it cost you to hire it done?

Ans. I should have to estimate what I paid by the week to get at that.

Cross-int. 37. Please estimate and state the result.

Ans. I should say about twenty-eight cents per case.

Cross-int. 38. What were her weekly wages?

Ans. Seven and one-half dollars per week.

Cross-int. 39. How many buttons in a case?

Ans. Some were child's shoes and some women's; in child's shoes they run from nine hundred to one thousand one hundred and forty in a case, and the women's shoes run from one thousand twenty to one thousand two hundred and forty buttons to the case.

Cross-int. 40. Then, at twenty-eight cents per case, on the machine you paid the operator less than three cents per hundred for sewing on buttons, did you not?

Ans. Yes; on the average.

Cross-int. 41. When a button was skipped by the machine, the other buttons did not come off of themselves, did they?

Ans. I suppose if they were not touched at all they would not come off, but they have to be handled and they might come off.

Cross-int. 42. To get the other buttons off you have to pull the thread, do you not?

Ans. Yes.

Cross-int. 43. If the thread is properly fastened at the end and the thread is not pulled when it skipped a button the other buttons stay on, do they not?

Ans. I never have tried that, so I shouldn't want to answer it.

Cross-int. 44. Who was the operator on your machine?

Ans. The one I furnished was Carrie Pyne.

Cross-int. 45. What instruction did she have about running the machine?

Ans. The Morley Company sent down an operator to tell her how to run the machine, and she was in the store from two to three weeks, I should think; I don't know just how long.

Cross-int. 46. Are you willing on reflection to state on oath
151 that the operator did not sew on the machine a single case of shoes where some buttons were not skipped?

Ans. Well, I know that nearly every case that came down stairs some buttons had to be sewed onto before they were packed.

Cross-int. 47. While the machine was running last year did you make any calculation at the time of how often it skipped a button?

Ans. No; I can't say I did.

Cross-int. 48. Then your estimate, given in your tenth answer, of one in every dozen pairs, is one you have made since you were called on to testify here, is it not?

Ans. Yes, sir.

Cross-int. 49. Were any shoes that you have sewed buttons onto by the machine sent back by the purchasers?

Ans. Yes; they were.

Cross-int. 50. How many?

Ans. Well, I had one party send them back to show how they were coming —. He sent back about ten pairs to show the way they were buttoned. That was about all that were sent back. That was when the complaint was entered not to sew any more on the machine.

Cross-int. 51. When were you first asked to testify in this cause?

Ans. I was asked my opinion of it about last September; I don't think I was asked to testify until October.

Cross-int. 52. Didn't you express your unwillingness to testify?

Ans. No, sir; I did not.

Direct examination resumed:

Int. 53. In your thirty-seventh answer, when you say the cost per case is about twenty-eight cents, does that include anything beside the wages of the operator?

Ans. That simply includes her wages.

Int. 54. Are there or not other expenses in using the machine, which increase the cost of sewing on buttons; if so, what are they?

Ans. Yes; there are. There is the cost of the gum arabic and the cost of keeping the machine in order, although that was no cost to me, because the company kept it in order; then there is the loss of
buttons. I don't know whether all machines were like ours
152 or not, but there was a great loss of buttons. The motion of the machine would jerk the buttons from the cup onto the floor.

Int. 55. State whether or not the company charged any royalty; if so, what.

Ans. Yes; they did; I think it was twelve and a half cents per thousand.

Int. 56. Can you tell about the amount of your husband's business in 1882?

Ans. It was between a hundred and twenty and a hundred and thirty thousand dollars.

Int. 57. And what proportion of your boots that year were button boots?

Ans. About all of them.

Int. 58. State whether or not you leased the first Morley machine above referred to by you; and, if yes, what did you pay for license fee?

Ans. I did, and I paid the Morley Company one hundred and fifty dollars for it.

Cross-examination resumed:

Cross-int. 59. The cost of the gum arabic used with the machine was the merest trifle, was it not?

Ans. Yes, sir.

Cross-int. 60. How many buttons do you honestly think were lost?

Ans. I think there was one-third as many buttons on the floor as what were sewed on.

Cross-int. 61. Were not those on the floor a good part of them gathered up and used?

Ans. Some were and some were not. It all depended on my own energy. If I attended to it and saw they were picked up they were picked up.

Cross-int. 62. How much per hundred did the buttons cost?

Ans. Those buttons I got from the company, so I paid a different price for them from what I did for the others. I couldn't estimate what they did cost. I think I paid fifty-eight cents per gross.

KATIE F. FLYNN.

Attest: FREEDOM HUTCHINSON,
Special Examiner.

153 *Deposition of Harnden H. Jennings.*

JANUARY 15, 1884.

Direct examination by GEORGE E. SMITH, Esq., of counsel for defendant:

Int. 1. Have you testified before in this case; if so, when?

Ans. I have; Oct. 30, 1883.

Int. 2. In your answer to Int. 71 you said hand sewing cost seventy-two cents per case of sixty pairs of twelve hundred buttons, and that the Morley machine was eighteen cents per case for labor. Will you now state what these figures cover by each method, and whether there are any other items that should be taken into account in ascertaining the relative cost of attaching the buttons to the shoes by each method? And, if so, state fully those items or particulars.

Ans. In attaching buttons by hand or by machine either the uppers have to be marked before the buttons are sewed on, and after

they are sewed on the uppers have to be buttoned and packed, and the seventy-two cents that I spoke of covers the whole cost by hand sewing; the items for those are: Marking, fifteen cents per case; buttoning and packing, fifteen cents per case, and sewing on the buttons is the remaining forty-two cents. For sewing on by machine, fifteen cents for marking, eighteen cents for sewing on, fifteen cents for buttoning and packing, and the royalty of twelve cents per thousand buttons, which would make about fourteen and one-half cents per case of twelve hundred buttons, making for labor forty-eight cents, and for labor and royalty sixty-two and one-half cents.

Int. 3. Then, if I understand your last answer, including the items of labor and the royalty specified by you, in using the Morley machine there is a difference of nine and one-half cents per case of twelve hundred buttons in favor of the machine as compared with hand labor. Is that correct?

Ans. It is.

Int. 4. Please state whether or not there are any other items besides the labor and royalty above mentioned that alter the relative cost of sewing on buttons by hand or by the Morley machine.

Ans. I don't think there are any that materially alter the cost.

154 Int. 5. By which method of sewing on buttons do you use the most thread?

Ans. As for that I couldn't positively state, but I think it would take considerably more by machine than by hand.

Int. 6. Looking at cross-int. 72 and answer in your deposition of Oct. 30, 1883, will you please state what the eighteen cents for labor there referred to covers?

Ans. That was the pay the operator received for operating the machine.

Int. 7. And does the operator usually mark the uppers or button and pack them after the buttons are sewed on?

Ans. They do not.

Cross-examination by AMBROSE EASTMAN, Esq., of counsel for complainants:

Cross-int. 8. Did you pay any specific price per case for the shoes whose buttons were sewed on by the Morley machine?

Ans. I did not.

Cross-int. 9. Was any price fixed in your shop for the work of sewing on the buttons by the machine?

Ans. There was not.

Cross-int. 10. Then the price of eighteen cents per case for machine sewing was only an arbitrary price assumed for the purpose of your calculation, from the question which I put at your former examination, was it not?

Ans. Not at all.

Cross-int. 11. How did you get it, then?

Ans. I got that from others that I knew paid that price for sewing on buttons, and I naturally supposed I would have to pay what others did.

Cross-int. 12. What others?

Ans. Other people that used the machine. I had my information from Mr. Warren—Charles Warren. He told me they paid eighteen cents for operating the machine. Mr. Warren was the Morley Company's agent.

HARNDEN H. JENNINGS.

Attest: FREEDOM HUTCHINSON,
Special Examiner.

155 It is stipulated that the following patents may be put in the case by defendant, and that official copies thereof may be referred to in the argument, whether the same are printed in the record or not.

The list is as follows:

United States letters patent granted to Joseph Mathison, assignor to himself and others, Nov. 28, 1882, No. 268,369; Nov. 28, 1882, No. 268,370; Jan. 10, 1882, 252,117.

Jeremiah Keith, Aug. 20, 1872, No. 130,581.

Jerome C. Taft, Dec. 7, 1875, No. 170,784.

No. 169,433, Nov. 2, 1875, to Z. Gelinas.

No. 194,005, Aug. 7, 1877, to E. A. Sherwood.

No. 195,715, Oct. 2, 1877, to C. H. Kellogg.

No. 222,837, Dec. 23, 1879, to S. L. Otis.

No. 224,583, Feb. 17, 1880, to F. W. Clough.

The following English patents:

No. 2837, of A. D. 1853, to Julian Bernard.

No. 1959, of A. D. 1854, to Samuel Frearson.

No. 2768, of A. D. 1857, to Thomas Lowe.

Also a certain French patent to Sieur Lecoq (Emile Felix), dated Aug. 21, 1854.

AMBROSE EASTMAN,
Complainants' Solicitor.
GEO. E. SMITH,
Defendant's Solicitor.

156 *Evidence for Complainants in Reply.*

Taken pursuant to the sixty-seventh rule of the Supreme Court of the United States, in equity, as amended, before me, Henry Hyde Smith, special examiner.

BOSTON, *Feb.* 14, 1884.

Present: Ambrose Eastman, Esq., of counsel for complainants; George E. Smith, Esq., of counsel for defendant.

Deposition of Charles A. Sinclair.

Direct examination by AMBROSE EASTMAN, Esq., of counsel for complainants:

Int. 1. Please state your name, age, residence, and occupation.

Ans. Charles A. Sinclair; thirty-five years old; Portsmouth, N. H.; brewer.

Int. 2. Do you have any official relation to the Morley Sewing Machine Company and to the Morley Button-Sewing Machine Company, the complainants in this suit; if so, what is that connection and how long have you held it?

Ans. I am a director and treasurer in both companies, and have held that connection ever since the organization of the companies.

Int. 3. As treasurer of the Morley Button-Sewing Machine Company what has been your duties in relation to the leasing of machines and collecting royalties for their use?

Ans. I have a general supervision of the entire business of the company, and have to sign the leases. I have control of the employés and look after the business generally.

Int. 4. Who receives the license fee upon leasing machines and the royalties paid by lessees for the use of machines?

Ans. I do, sir.

Int. 5. State whether or not the books of account of the company are kept under your supervision and subject to your constant inspection.

Ans. They are.

Int. 6. When did the Morley Button-Sewing Machine Company begin the business of leasing machines and collecting royalties?

157 Ans. I should say about eighteen months ago. My impression is it was in July, 1882.

Int. 7. How many machines has the company put out since it began operations, as nearly as you can now recollect?

Ans. About one hundred.

Int. 8. How many of these are paying royalties from month to month at the present time?

Ans. From seventy to eighty. There is an apparent discrepancy between this answer and my previous one. I will explain. The quantity of work done by shoe manufacturers varies; some months they will average ten cases a day; others, twenty or twenty-five. When they do ten cases they may do the work on one machine. Twenty or twenty-five cases would require two or more. While we have about one hundred machines out, as stated in my previous answer, last month, in January, we only received royalties on about seventy-five machines.

Int. 9. State whether or not you find an active demand among shoe manufacturers for the company's machines.

Ans. We do; we have orders on our books to-day which as yet we have not been able to fill.

Int. 10. State whether or not the call for your machines has increased as they became known to the trade, and compare, if you have the figures in mind, the number of the machines running and the amount of royalties paid by the lessees in January, 1883, and January, 1884.

Ans. It has. In January, 1883, we had about fifty machines running; in January, 1884, about one hundred. The royalties paid to us in January, 1883, were about $350; the royalties in January, 1884, were between $850 and $900—over $850.

Int. 11. Referring to your last answer, when you compare machines of January, 1883, with those of January, 1884, do the numbers given refer to machines which you have put out or to machines then running in actual use?

Ans. My answer to Int. 8 answers the question as to machines running in January, 1884. In 1883 I should say there were about fifty, possibly less.

158 Int. 12. What class of shoe manufacturers have adopted and are using your machines? Name some of your principal lessees.

Ans. We think they are all first-class concerns. They are known as first-class concerns, as good as any in the shoe business, I should say. Some of our principal lessees are E. & A. Mudge & Co.; the Davis Shoe Company; the Portsmouth Shoe Company; David Cummings & Co.; Moody, Easterbrook & Co.; Colburn, Fuller & Co.; John F. Cloutman; Jones & Shippee; Cropley, of Marblehead; Munroe, of Marblehead; C. M. Lee; Hawkins, of Maine; James P. Phelan, of Lynn; P. Sherry; P. B. Keith; George E. Keith; I think, Fogg, Shaw, Taylor & Co.—I can't remember exactly; Rogers, of Salem; Martin, Clapp & French, I think, is the firm name; Seth Norwood, of Beverly; Burleigh & Usher; Vinton, Jenkins & Co.; Gardner, of Harverhill. There are a large number of others whose names I don't remember.

Int. 13. State whether or not any of your lessees have more than one machine. If so, please name some of those who use a larger number.

Ans. The majority of them, I should say, have more than one. At any rate, a large number of them do. Among those having more than one, the Davis Shoe Company have four or five; David Cummings & Co., two; Hawkins, I think, two; John F. Cloutman, of Farmington, N. H., has four; the Portsmouth Shoe Company has two; Vinton & Judkins, two; Munroe and Cropley have two each, I should say; Rogers, of Salem, has two or three; Colburn, Fuller & Co. have two; and several others;-I can't remember them all.

Int. 14. Do you know a firm called Winslow & Rogers, of Salem? If yea, state whether or not the Rogers mentioned in your previous answers belong to that firm.

Ans. He does.

Int. 15. State whether any Brockton firms other than those you have mentioned are using your machines.

Ans. There are a large number of manufacturers in Brockton and Campello; nearly all of them, if not all of them use our machines; but I can't remember all of their names.

Int. 16. State whether or not any of the Stoneham manufacturers other than those you have mentioned are using your machines.

159 Ans. Yes, sir; I remember the Stoneham Co-operative Shoe Company, and there are others, but I can't remember their names.

Int. 17. What is the rate of royalty at which your lessees pay for the use of the machine?

Ans. Twelve cents for every thousand buttons.

Int. 18. Do they make stated returns in writing to your company of the amount of work done on the machines; if so, how often?

Ans. Yes, sir; every month.

Int. 19. Mention the amount of monthly royalties received by you from some of your lessees, naming them.

Ans. The Davis Shoe Company ran three machines in January and paid us a royalty of about eighty dollars; the Portsmouth Shoe Company ran one machine and paid us a royalty of twenty-odd dollars—about twenty-five dollars, I should say; Seth Norwood, about twenty-six dollars, one machine; David Cummings, one machine, about twenty-two dollars, I think, and one about eleven. There are quite a number of machines paying us from twenty to thirty-five dollars, and more that didn't earn as much.

Int. 20. Taking the whole number of machines of which returns are made to you as running in January, 1884, and the amount of royalties received therefor, what is the average yield to you per machine for that month?

Ans. About twelve dollars and a half per machine. There are two or three machines from which we haven't had returns yet, and so I don't know just how much they will yield.

Int. 21. State whether or not Charles B. Lancaster, the defendant in this suit, has leased and is using one or more of your machines. And, if so, what amount of monthly royalties does he pay?

Ans. Mr. Lancaster came to me, I should say, six or eight months ago and said he wanted one of our machines, but that he understood we were getting out an improved machine. He didn't want to take a lease of the machine we then had, but if we would let him have it he would pay us royalty on all the work done on the machine until such time as we completed our new machine, when he would exchange and take a lease of said new machine. We let him have a machine on those conditions, and he has paid us a royalty of from fifteen to twenty dollars a month ever since.

160 (All of the answer above "We let him have" objected to by Geo. E. Smith, Esq., of counsel for defendant.)

Int. 22. State, if you know, how many cases of shoes a good operator will sew buttons upon by your machine per day.

Ans. I have known an operator to sew buttons on twelve cases a day for a week, or seventy-two cases in a week. An average day's work is from seven to ten cases.

Int. 23. State, if you know, what is the reputation of the Morley machine for utility and effective work among shoe manufacturers.

(Objected to.)

Ans. It is good.

(Adjourned.)

FEBRUARY 15, 1884.

Int. 24. State whether or not the reputation of the machine has improved since the first were put out; state, also, whether any difficulties were found in the first machines, and whether these have since been remedied. State fully the circumstances relating to this matter.

(Objected to.)

Ans. The reputation of the machine has decidedly improved since the first were put out. We had a great deal of difficulty with our first machines for several reasons: 1st, there was a contract made with a man by the name of Secor for one hundred machines. After the machines were partially constructed we found that he did not have proper tools and facilities for making, as he had contracted to do, a first-class machine, but, having them so nearly completed, we decided to let him finish the contract. He finished quite a number of the machines and forwarded them to us at our office in Boston. We put them out among several shoe manufacturers and then our trouble began. After they had been running a short time we began to get complaints. We endeavored to fix the machines and make them satisfactory, and soon found that the trouble was caused by the machines not being properly constructed. It caused us a great deal of trouble, and we were obliged to take the machines and everything pertaining to them away from Mr. Secor. We then
161 employed the best machinist we could secure and undertook to reconstruct the machines. After a considerable time and expense we found that it was costing us more than it would to build new machines. We then decided to make a contract to build a lot of machines with some responsible and well-known machine builders. We did so. As the result we have a machine that gives us very little trouble—less, in fact, than the majority of machines in the shoe manufacturing.

Cross-examination by THOMAS W. CLARKE, Esq., of counsel for defendant:

Cross-int. 25. Have you taken in all your Secor machines?

Ans. No, sir. As I stated in my last answer, we rebuilt and reconstructed the Secor machines, and they are now out and running very satisfactorily.

Cross-int. 26. What class of work, if you know, are these Morley machines used upon—men's work or women's and children's?

Ans. On all of them; mostly women's and children's.

Cross-int. 27. And on what grade of women's and children's?

Ans. On all grades; mostly on what they call cheap and medium grades. Owing to its being a new invention, manufacturers were at first rather timid about using it on their best grades, but their objections are fast wearing away, the work that the machine does being stronger than hand work. The manufacturers using the machine are very generally using it now on their best grades.

Cross-int. 28. Was there any change made in the form of parts

or in their proportion and relations from those originally put by Mr. Secor into the machine and the form, proportion, and relation of parts used in reconstructing the machine by the best machinist you could secure?

Ans. Yes, sir. The parts, as constructed by Mr. Secor, were not interchangeable—were not uniform in size; and, while there was no particular change made in form and proportions, we endeavored to make them, so far as we could, interchangeable, uniform in size—in fact, so far as we could, to construct a perfect machine.

Cross-int. 29. When you decided to build a new lot of machines instead of altering the Secor machine did you have a new
162 set of drawings and patterns or a partly new set of drawings and patterns made for the new machine?

Ans. We did not have a new set of drawings made for the new machine. From time to time there were certain improvements made in our machine, which were added to the machines as they were being rebuilt. If I was a machinist I should know how to express myself, but, as I am not, I hardly know how to describe these improvements. There was no change made in our stitch button-feeding device or cloth-feeding device. It was our aim, so far as possible, to do all that we could to lessen the expense of building the machine, to overcome the complications and simplify the machine.

Cross-int. 30. About what time did you take the machines and everything pertaining to them from Mr. Secor and begin the work of reconstruction yourselves?

Ans. I can't tell exactly; I should say about a year ago.

Cross-int. 31. And about how long ago was it when you began to build your new lot of machines by contract?

Ans. I should say about five months.

Cross-int. 32. During the seven months that you were at work reconstructing the Secor machines these improvements to which you refer were made and introduced, were they not?

Ans. No, sir; some of the improvements were added to the machine at that time, but the most of them, a very large proportion, were not embodied in the Secor machine, so called.

Cross-int. 33. Now, did you have to have made, for the purpose of adding these improvements to the machine built by contract within the last five months, any new patterns or new special tools, or to make any alteration in the patterns and special tools which came to you from Secor?

Ans. Our machine that we have to-day, which we call our new machine, is substantially the same as the Secor machine, or, as we call it, our old machine. To that machine there have been some parts or pieces taken away and others added. It is possible that a few new tools and a few patterns may have been made to facilitate the building of these pieces or parts, but very few, if any.

163 Cross-int. 34. In what part of the machine, as originally constructed by Secor, have the alterations been made, if you know?

Ans. I don't know.

Cross-int. 35. In what part of the machine, as originally constructed by Secor, have alterations not been made, if you know?

Ans. No alterations have been made in the sewing device. I think none in the cloth-feeding device; and we use the same button-feeding device; and the bed of the machine is substantially the same.

Cross-int. 36. When you say in your last answer button-feeding device do you include all the parts in which buttons are contained, from the hopper to the place where they are delivered to the needle?

Ans. Yes, sir.

Cross-int. 37. Were the machines made by Secor the first machines put out among the trade by your company?

Ans. Yes, sir.

Cross-int. 38. Are these parts which you say have not been altered arranged in relation to the working point of the machine—that is to say, the place where the stitching on of the buttons is done—in the same way in the new machine as in the old machine?

Ans. I don't know anything at all about the mechanical construction of the machine. As I stated in a former answer, there have been some parts taken from and some added to the machine. It is possible they may differ slightly, but I am not familiar enough with the machine or haven't sufficient knowledge of the construction of the machine to state wherein such difference exists, if any such difference does exist.

Cross-int. 39. Is it not true that the stitch made by the old machine was so made as to have two distinct stitches, one short and one long, between the buttons, while the stitch made by the new machine gives only one long stitch between the buttons?

Ans. The stitch made on our new machine is made with the same mechanism as our old stitch precisely, with this exception, there has been a small piece added to one of the parts of our machine—I think to the presser-foot or cloth-feeding device, I am not sure which, and it may not be to either, but to some part of the
164 machine—which we call a thread carrier; it is a very small and simple device, but it enables us to carry both threads through the eye of the button instead of one outside, which you refer to as the short stitch.

Cross-int. 40. Hasn't the arrangement for transferring the buttons from the end of the chute to the place of the path of the needle been changed so as to make the path of the button as it is transferred from the end of the chute to the stitching place a circular instead of a spiral or helical arc, as in the old machine?

Ans. I don't know.

Cross-int. 41. Hasn't the relative position of the end of the button chute and the place where the needles play up and down been changed in the new machine so as to bring them nearer together than in the old machine and in different relative positions in reference to the line of cloth feed or the line in which the cloth runs?

Ans. I am not positive, but I should say there has been some change, and that they may have been brought nearer together.

Cross-int. 42. How many of the machines which made returns to

you for January, 1884, were of the kind which you call the new machines?

Ans. We have about a hundred machines out, and I should say that there were fifteen or twenty of our new machines among the number on which we received a royalty.

Cross-int. 43. Do the new machines make larger returns of royalty than the old machines?

Ans. No, sir; not as large, for the reason that in putting both threads through the eye of the button we cannot speed it as high; consequently cannot sew on as many buttons with the new machine as with the old machine.

Cross-int. 44. Out of the hundred machines which you had out in January, how many of them did not pay any royalty or return any work?

Ans. I should say about twenty-five or thirty machines. The reason of the larger proportion of these twenty-five or thirty machines not returning a royalty was because the factories where they have two or more machines were not doing work enough to keep them all running. For instance, the Davis Shoe Company have four machines. They were not running up to their full capacity;
165 consequently did not use but three of their machines. The Portsmouth Shoe Company have two machines, but for the same reasons run only one of them. David Cummings & Co., ditto; Munroe, ditto; Cropley, ditto; Vinton & Jenkins, ditto. I have no doubt there are other instances, but these are all I recall at present. Quite a number of large manufactories have extra machines, in case one should break down or get out of order. I presume this is the case in some instances with our machine.

Cross-int. 45. How many new machines altogether were built for you under the contract with "some responsible and well-known machine builder?"

Ans. About fifty.

Cross-int. 46. Do you know whether or not during the month of January the Davis Shoe Company had a considerable part of the button sewing on their best work done on the Lancaster machine?

Ans. I wasn't aware of that fact.

Cross-int. 47. Have you a system of inspection by which you ascertain the accuracy of the manufacturers' returns made to you?

Ans. We have a system, but, as we deal only with reputable concerns, we have never had any occasion to use it. We take the returns as they make them every month without any question.

Cross-int. 48. Have Harris & Co., of Marblehead, any of your machines; and, if so, how many?

Ans. They have four or five, I think.

Cross-int. 49. Have they made any returns for the use of the machines within the past three months?

Ans. No, sir.

Cross-int. 50. Are there any Lynn manufacturers having your machines for which they have not made returns within the last three months?

Ans. I think there is one.

Cross-int. 51. Who is that?

Ans. Morris Flynn.

Cross-int. 52. How is it about Mr. Connor, of Lynn?

Ans. I couldn't tell you.

Cross-int. 53. How many machines have you in Lynn, as far as you now remember?

166 Ans. I should say six or eight.

Cross-int. 54. This machine that Mr. Lancaster took has not been changed since he took it, has it?

Ans. It has not, to my knowledge.

CHAS. A. SINCLAIR.

Attest: HENRY HYDE SMITH,
Special Examiner.

Deposition of Henry A. Chapin.

BOSTON, *February* 13, 1884.

Direct examination by AMBROSE EASTMAN, Esq., of counsel for complainants:

Int. 1. Have you examined a certain patent for an improvement in machines for securing buttons to cards, issued by the United States Patent Office to Samuel L. Otis Dec. 23, 1879, No. 222,837?

Ans. I have examined said patent.

Int. 2. State whether or not the invention described in said patent embodies any of the combinations claimed in the Morley patent No. 236,350, upon which the present suit is brought. Give in full your reasons for any opinion you may express.

Ans. I do not find in said patent to Otis the combinations of mechanism described and claimed in the said Morley patent, for the reason that there is not described or shown in the Otis patent any button-feeding mechanism; neither does it describe or show anything which may be properly called sewing devices. It is true that in said patent devices called needles, which consist of hooks, are employed to draw thread down through two holes in flat buttons and through a card in which the buttons lie, and, after having so drawn the thread, it is said that cutters operate to sever the thread between the different buttons; therefore no stitch is formed, and that the ends of the thread are pasted against the under side of the card to secure the button upon the latter.

Int. 3. Have you examined and are you acquainted with United States letters patent for a machine for attaching buttons to sale cards, dated Feb. 17, 1880, numbered 224,583, granted to Francis W. Clough?

167 Ans. I have examined and am acquainted with the letters patent granted to Clough, mentioned in the question.

Int. 4. Were you the solicitor who drafted the application and the specifications describing the invention named in the Clough patent?

Ans. I was.

Int. 5. State whether or not the inventions described in said

Clough patent, in your opinion, embody any of the inventions or combinations which are described and claimed in the Morley patent, No. 236,350, upon which the present suit is brought. State fully your reasons or any opinions which you may express in your answer to this interrogatory.

Ans. The said patent to Clough does not embody the invention described and claimed in the said patent to Morley, because in this machine there are no sewing devices. It is a machine for making wire staples and passing them through the holes in flat buttons after said buttons have been placed on a card and clinching the ends of the staple under the card to secure the buttons to the latter. The buttons are supplied to this machine one by one by the operator, and are not taken from any hopper, for there is none shown in the patent. After the button has been placed upon the machine as I have said an arm having a reciprocating rotary motion engages with the button and swings it to a position on the card under two perforating needles, which pass through the holes of the button and the card underneath it, preparing holes for the legs of the beforementioned staple to pass through.

Int. 6. Have you examined United States letters patent issued to Emmett A. Sherwood for improvement in machinery for feeding and attaching buttons, dated Aug. 7, 1877, numbered 194,005? If so, please state whether or not, in your opinion, the inventions described and claimed in said Sherwood patent embody any of the inventions or combinations described and claimed in said Morley patent, No. 236,350, upon which the present suit is brought. Please state fully your reasons for any opinion which you shall express in your answer to this question.

Ans. I have examined and understand the patent to Sherwood mentioned in your question, which patent shows and de-
168 scribes an apparatus for conveying shank buttons from a hopper down to devices at the end of a chute one by one as a foot treadle is operated by the operator and a button receptacle at the lower end of the chute to hold the button with its shank in a vertical position, ready to be sewed onto any fabric that may be held onto the button, by a needle and thread in the hands of the operator. There are no sewing devices shown in the patent; hence I do not think that it embodies the invention described and claimed in the Morley patent.

Int. 7. Have you examined and do you understand United States letters patent dated Nov. 2, 1875, No. 169,433, issued to Zoel Gelinas, assignor to Goldthwaites, for an improvement in button-feeding devices? If so, please state whether or not the invention described and claimed in said Gelinas' patent embodies any of the inventions or combinations described and claimed in said Morley patent, No. 236,350, upon which this suit is brought. Please state fully your reasons for any opinion you may express, showing the resemblance, if any, and differences between said Gelinas' invention and the invention described in said Morley patent.

Ans. I have examined and understand the invention *to* Gelinas mentioned in the question, which patent mentions and describes a

machine for taking from a hopper and placing in certain positions flat buttons, through which are the usual thread holes. There are no sewing devices shown in the patent; hence I do not think that said patent embodies the invention described and claimed in said Morley patent. The Morley machine employs a hopper, and there is a hopper shown in the patent to Gelinas. In that respect there is a slight resemblance, but otherwise the Gelinas device is a radically different construction and for a different purpose from that embodied in the Morley patent.

Int. 8. Have you examined and do you understand United States letters patent granted to Charles H. Kellogg for improvement in machinery for attaching buttons to cards, dated Oct. 2, 1877, No. 195,715? If so, please state whether or not the inventions described and claimed in said Kellogg patent embody any of the inventions or combinations described and claimed in the Morley patent, No. 236,350, upon which the present suit is brought. Please state fully your reasons for any opinion which you may express in your
169 answer to this interrogatory, pointing out the resemblance, if any, and the difference between the two said inventions.

Ans. I have examined and understand the said patent to Kellogg, mentioned in the question, which shows and describes a machine for attaching flat buttons to a card by wire staples. This machine is provided with perforating needles to perforate the card and make holes through which the staple passes. I do not find any sewing devices described or shown in said patent. The buttons are supplied to the card by being placed carefully, the right side up, onto a chute, from whence they slide into position, from which they are taken onto the card. Owing to the difference in the button-supplying devices shown in this patent from those employed in the Morley patent and the absence of sewing devices in the Kellogg patent, I do not think that the said patent to Kellogg embodies the invention described and claimed in the Morley patent.

Int. 9. Have you examined and do you understand English letters patent numbered 2837, of 1853, taken out by Julian Bernard, for sewing machines? If so, please state whether or not the inventions described in the specification of said Bernard embody any of the inventions or combinations described in said Morley patent, No. 236,350. Please state fully your reasons for any opinion you may express in answer to this question, pointing out resemblances and differences, as in your previous answers.

Ans. I have examined and understand said patent to Bernard, so far as it relates to means for sewing buttons onto materials or garments, the patentee saying that it relates, among other things, "to an improved arrangement or construction of mechanism for stitching or securing buttons or other fastenings to garments and to various materials." The patent shows sewing-machine devices, but does not show or describe any means for automatically feeding buttons to the sewing devices, but it describes a manner of placing a flat button by hand upon material on the machine, holding it there by a clamp and then sewing it on. Since this patent does not show in combination with sewing devices any means for automatically

feeding buttons to the latter, I do not think it contains the invention described and claimed in said Morley patent.

170 Int. 10. Have you examined and do you understand English letters patent numbered 2768, of 1857, taken out by Thomas Lowe? If so, please state whether or not the inventions described in the specification of said Lowe embody any of the inventions or combinations described in said Morley patent, No. 236,350. Please state fully your reasons for any opinion you may express in answer to this question, pointing out resemblances and differences, as in your previous answers.

Ans. I have examined and understand said patent to Lowe, which is for "feeding screws, blanks, and other articles to turning, nicking, and worming lathes." The said patent neither shows nor makes any mention of any sewing devices, nor of any buttons, nor of any means for handling buttons, but the subject of said patent is simply devices for conveying screw blanks to devices for manipulating them in the process of finishing the same. Certain devices are shown in the patent for receiving the blanks from the feeding devices, but the inventor says his "invention only relates to the feeding of blanks and other articles to the machines in which they are to be operated upon." Since said patent makes no reference to any button feeding or sewing devices whatever, I do not think that it embodies the invention described and claimed in said Morley patent.

Int. 11. Have you examined and do you understand the French patent — Lecoq, dated Aug. 21, 1854? If so, please state whether or not the inventions described in said Lecoq patent embody the inventions described and claimed in said Morley patent, No. 236,350. State fully your reasons for any opinion which you may express in answer to this question, and point out any resemblances and differences between the two patents, as in your previous answers.

Ans. I have not the said Lecoq patent before me, but I examined said patent several months ago, and, as I remember its subject-matter, I think I then understood it to be a device for receiving in a tubular holder metallic blanks, which were fed from said holder to some sort of embossing and engraving devices. There was not, as I remember, any sewing devices described or shown in that patent, nor was any mention made, as I remember, of any buttons or of any

171 devices for handling buttons. In the absence from said patent of any reference to sewing devices or button-feeding devices, I do not think that it embodies the invention described and claimed in the said patent to Morley.

Cross-examination by GEORGE E. SMITH, Esq., of counsel for defendant:

Cross-int. 12. Suppose a machine to have a mechanism for feeding buttons which are not shank buttons to a position where they can be, one at a time, operated upon by a needle and thread to secure them to a fabric, said buttons, which are not shank buttons, being buttons with two holes side by side in a disc; and suppose this machine to have means for feeding the fabric along to properly

space the buttons thereon, as I understand you, the fact that the buttons were not shank buttons would not make, in your opinion, a mechanical difference between such machine and the machine of the Morley patent; am I correct?

Ans. The question, I believe, assumes some statement to have been made by me which I am not aware of making. I believe I have not stated yea or nay as to the question as to the mechanical difference between two machines, in relation to the Morley patent, whether one operated a flat button and the other a shank button. Before stating what such mechanical difference might be I should prefer to make such statement upon something more tangible than a supposition. Buttons of disc shape, having two holes through them, can be secured to a card or other similar thing by needles, or something performing some part of the function of needles, and a piece of thread, which thread does not form a continuous stitch or a continuous line of stitches. The part of the question which says, "when they can be one at a time operated on by a needle and thread to secure them to a fabric," I am not sure about the meaning of it. It may mean to sew them on, and it may mean to draw the threads through and secure the ends under the card or fabric.

Cross-int. 13. Do you consider that the thing to which the buttons are secured, whether it be a card or a fabric other than a card, constitutes a distinguishable mechanical difference between the contrivance of the Morley patent and other mechanical contrivances not within the Morley patent?

172 Ans. I don't understand that the uses of the contrivances of the Morley patent are limited to any particular kind of fabric or material which is adapted to be operated upon by a sewing machine and have buttons sewed on to. Ordinarily, it is fair to suppose that a good mechanic in building a machine to attach buttons to paper would adapt it to that work, and, if to leather, to that work. Whatever mechanical difference there might be would be the mechanical difference which is required by the machine which had the work to do.

Cross-int. 14. Would you be kind enough to tell me whether all the verbiage of your last answer means yes to the question or whether all the same verbiage means no to the question?

Ans. I am hardly able to see how the insertion of a card or a piece of leather or a piece of cloth into a sewing machine can constitute a distinguishable mechanical difference in the machine from any other machine.

Cross-int. 15. Then the answer to Int. 13 is no, is it?

Ans. I did not say so.

Cross-int. 16. Then it is yes, is it?

Ans. Neither did I answer unqualifiedly yes or qualifiedly; but I did answer the question in my two preceding answers to the best of my ability, as I understand the question.

Cross-int. 17. Then it is your best notion that you cannot tell without a speech whether you do consider or you don't consider the things inquired of in cross-int. 13 to be true or false, is it?

Ans. The way the Int. 13 is framed compels me to answer the

question as I did in my answer to that interrogatory and to Int. 14. That is the best answer I can give the way the question is put.

Cross-int. 18. You can't tell us, then, by yes or no what your present consideration of the subject-matter of Int. 13 is?

Ans. I do not wish to answer Int. 13 in its present form otherwise than I have already answered.

Cross-int. 19. Please now answer the last cross-int., 18, as to your ability and not your desire, for the question was can and not will.

Ans. The answers that I have given to Int. 13 are the best I am able to give, the way the question is drawn.

173 Cross-int. 20. Can you tell me, and if you can tell me, will you tell me, whether you consider the difference between shank buttons and disc buttons with holes in them as the things to be sewed on to be mechanical distinctions in a button-sewing machine?

Ans. There undoubtedly would have to be a distinctive mechanical difference between two machines, one of which was for feeding and sewing disc buttons onto a fabric, and the other of which was for feeding and sewing shank buttons onto a fabric; the difference would lie largely in means for handling and feeding the buttons; also the sewing devices for flat buttons would evidently have to be different from those used for sewing on shank buttons.

Cross-int. 21. The sewing devices for shank buttons would necessarily be such as could pass a thread through the eye of the button and the fabric and through the space outside of the shank of the button and through the fabric, wouldn't they? By shank I mean the wire by which the button is fastened on, and by eye I mean the space surrounded by the shank.

Ans. That is the ordinary way by which a stitch is made in sewing on a shank button.

Cross-int. 22. Isn't it the necessary way?

Ans. The shank button is made to have the stitch made in that way—that is, the shank button to which I suppose allusion is made in the question.

Cross-int. 23. Now, isn't it necessary, in a machine for sewing on disc buttons with two holes in them, to have the thread go through the fabric and through one of the holes and then across the partition that separates that hole from the other one and then through the other hole and through the fabric again?

Ans. If the machine does sew on a disc button the thread would run through the fabric and over the button in the manner described in the question; but the question leaves the button not sewed on, for it contemplates both ends of the thread stopping beneath the fabric, as I understand the question.

Cross-int. 24. Do you consider it important and a mechanical distinction that the thread or fastening of buttons to fabrics should form a continuous stitch or a continuous line of stitches?

174 Ans. What is meant by a "mechanical distinction?"

Cross-int. 25. Do you consider it important that the thread which fastens the buttons should form a continuous stitch?

Ans. When buttons are sewed on by hand, no; but, for conven-

ience and rapidity of manipulation, when they are sewed on by a machine, it would not be convenient to cut the thread between the buttons.

Cross-int. 26. So that, whether the thread between the buttons is necessary to hold them on or a mere convenient incident of sewing, if it be a machine that sews the buttons on, there is no distinction that amounts to a mechanical difference, while, if the work be done by hand, there is a distinction; do I get you correctly?

Ans. I did not say that there was no mechanical distinction between different forms of stitches or different methods of running the thread as done by different mechanical devices for sewing on buttons. The way that thread runs between some mechanically sewed on buttons does not aid in securing the button against strain between the button and the fabric as much as other ways of placing the thread between the buttons. A thread can be run between the buttons which will take a broad bearing on the fabric, and one can be run which will take a single line bearing on the fabric. The mechanical difference between the two lies mainly in the difference in the strength of the button attachment under the two conditions.

Cross-int. 27. And if the button attachment, where there was a single thread between the buttons, was stronger than where there were three threads between the buttons there would be considerable mechanical difference, wouldn't there?

Ans. If a single thread is stronger than three the difference would lie in the difference of strength. I stated in my previous answer that a thread—and when I say a thread I mean the thread between the buttons—could be made to take a broad bearing; such a broad bearing lessens the tendency of the thread to tear out the fabric.

HENRY A. CHAPIN.

Attest: HENRY HYDE SMITH,
Special Examiner.

175 *Further Evidence for Defendant.*

Taken pursuant to the sixty-seventh rule of the Supreme Court of the United States, in equity, as amended, before me, Freedom Hutchinson, special examiner.

BOSTON, *May* 10, 1884.

Present: Ambrose Eastman, Esq., of counsel for complainants; J. E. Maynadier, Esq., and George E. Smith, Esq., of counsel for defendant.

Deposition of Albert H. Sawtell.

Direct examination by GEO. E. SMITH, Esq., of counsel for defendant:

Int. 1. Have you previously been sworn and testified in this cause?

Ans. I have.

Int. 2. Have you since the 14th of February, 1884, visited the

shoe manufactories in the city of Brockton? And, if so, state when, and how many manufactories you visited in said city.

(Objected to by counsel for complainants as irrelevant and not in rebuttal.)

Ans. I have; on Feb. 18th and 19th I visited eighty-four manufactories in Brockton.

Int. 3. In each of those manufactories, state whether or not you went into the room where buttons were stitched on the boots or shoes.

(Same objection as to No. 2.)

Ans. I did.

Int. 4. Will you read Int. 15 and answer thereto in the deposition of Charles A. Sinclair and state whether or not you found,
176 as therein stated, that nearly all of the manufacturers used the Morley button-sewing machine for sewing on their buttons.

(Objected to as irrelevant.)

Ans. I will. I did not find it so.

Int. 5. How many of the eighty-four manufacturers whose shops you visited had the Morley button machine, and how many machines in all did you find?

(Same objection as to No. 2.)

Ans. I found nine manufacturers, using eleven machines.

Int. 6. State whether or not those nine manufacturers sewed all their buttons on by machines.

(Same objection as to No. 2.)

Ans. As far as I know, they did.

Int. 7. Please state the amount of business done by some of the other manufacturers not using the Morley machine as compared with the nine who did use it.

(Same objection as to No. 2.)

Ans. I think there are as many others as large that are sewing their buttons by hand.

Int. 8. How many shoe manufacturers are there in the city of Lynn?

(Same objection as to No. 2.)

Ans. About two hundred.

Int. 9. About how many of them do work enough to employ one or more button-sewing machines?

(Same objection as to No. 2.)

Ans. About one hundred.

Int. 10. State how many now use the Morley machine, if you know, and name them.

(Same objection as to No. 2.)

Ans. I think there are only three—the Davis Shoe Company, James Phelan, and E. W. & C. F. Mower.

Int. 11. Since Feb. 14, 1884, when Mr. Sinclair testified, do you know whether any manufacturers using the Morley machine have given them up or ceased to use them and have been using the Lancaster machine in place thereof?

(Same objection as to No. 2.)

177 Ans. They have two in Lynn. Patrick P. Sherry has taken out a Morley machine and put in a Lancaster; V. K. & A. H. Jones have done the same; David Cummings & Co., South Berwick, Maine, have taken out a Morley and put in a Lancaster; Boyd, Corey & Co., Marlboro', Mass., have done the same.

Int. 12. When did you first begin to put out the Lancaster machines among manufacturers?

(Same objection as to No. 2.)

Ans. Oct. 30, 1883.

Int. 13. How many have since been put out in Lynn, and how many in other places?

(Same objection as to No. 2.)

Ans. Twenty-five in Lynn and five in other places.

Int. 14. What is the initial license fee and the royalty paid by manufacturers for the Lancaster machine?

(Same objection as to No. 2.)

Ans. The license fee is $150, and twelve cents per thousand buttons for all buttons sewed on.

Int. 15. State whether or not any manufacturer who has commenced to use the Lancaster machine has given it up.

(Same objection as to No. 2.)

Ans. They have not.

Int. 16. State, if you know, what is the reputation of the Morley machine for utility and effective work among shoe manufacturers?

(Objected to as irrelevant.)

Ans. It is not good.

Int. 17. State, if you know, what is the reputation of the Lancaster machine for utility and effective work among shoe manufacturers.

(Same objection as to No. 2.)

Ans. It is good.

Int. 18. State whether or not you have on your books any orders for more Lancaster machines.

(Objected to as irrelevant.)

Ans. We have quite a large number.

Int. 19. State whether or not more are being built.

(Same objection as to No. 2.)

178 A. There are.

Int. 20. State whether or not your business now calls you among shoe manufacturers, and whether it did formerly, when you were in the employ of the Morley Company.

Ans. It does now and did when in the employ of the Morley Company.

(Same objection as to No. 2.)

Int. 21. Will you please give what, in your opinion, are the chief reasons that make the Lancaster machine preferred by manufacturers to the Morley machine, disregarding all details of construction, but fully explain the operation of both machines?

(Objected to as assuming what is not proved by the evidence, that the Lancaster machine is preferred by manufacturers to the Morley machine; also as having been gone into on the direct examination of this witness, as irrelevant and not in rebuttal.)

Ans. I will. First, the stitch. The Morley stitch is wholly different from the Lancaster. The Morley machine makes four holes through the fabric, showing two stitches crosswise to the line of buttons, underneath showing two lines of thread, which makes the work look very bad, and, in my opinion, the Morley machine can never compete with hand sewing, as it uses double the amount of thread used by hand, and the raveling out of the stitch is a serious objection to manufacturers. The Lancaster machine makes only two holes through the fabric, the same as in hand sewing, showing a neat and uniform line of fastening parallel with the line of buttons, underneath showing a single line of thread, the same in appearance as hand sewing, only neater and more uniform.

Second, feeding the buttons to the needle. Morley's plan is taking the button from the mouth of the trough by means of mechanism, conveying and holding the same in proper relation to the needle. Lancaster's plan is wholly unlike Morley's, as on the first motion of the needle it passes down directly through the shank of the button while it remains in the mouth of the trough, taking it from the same without the aid of any button finger or other device for removing or holding the same.

Third, feeding the fabric. Morley's plan is to first make a stay stitch to anchor the thread in the fabric, then to feed a short
179 feed, making another stitch through the button; then feeding a long feed, then making another stay stitch, then a short feed through the button, and so on, making a long and short stitch to each button.

Lancasters plan is, on the first motion of the needle, to pass it directly down through the shank of the button while it remains in the trough, bringing up a loop of thread, then going down through outside of the button shank, bringing up another loop, feeding a long feed for the space required between the buttons, tying or knotting

on each button separately, making only one feed to a button. This is like Keith's plan, not like Morley's.

Int. 22. Please explain a little more fully what you mean by tying or knotting and produce a single button tied on in the manner in which it is done by the Lancaster machine.

(Objected to as having been gone into fully in direct examination and not proper evidence in rebuttal.)

Ans. I mean by tying or knotting on that the button is not sewed on for the reason that the button shank forms one loop or part of the knot which, if taken away, would not form any knot, as the loops would pull back through the fabric, leaving no appearance of any fastening whatever, as in the Morley machine it makes no difference if the button is taken away, as the machine forms its stitch without the aid of the button, while in the Lancaster it is impossible to form any fastening whatever without the button.

(I here produce the single button and mark it "Defendant's Exhibit Single Button.")

Ans. 23. Suppose the two fingers marked *d'* and *d'* in the Mathison patent, No. 268,369, were removed and the machine was run without them, state what the result would be.

(Same objection as to the last interrogatory.)

Ans. The result would be that no fastening or knot would be formed, as this carries the loop over the button, forming a knot.

Int. 24. In your description of the Morley stitch you did not refer to keeping the buttons in line with each other. Please explain as to this, as to the Morley stitch, the hand stitch, and the Lancaster knot.

(Same objection as to Int. 22.)

Ans. The Morley stitch, lying crosswise to the line of but-
180 tons, gives the buttons a chance to move out of line with each other. In the hand stitch it lies parallel with the line of buttons, with no chance for the buttons to move crosswise, as with the Morley stitch. The Lancaster stitch runs parallel with the line of buttons, same as in hand stitch, giving the buttons no chance of moving out of line.

Cross-examination by AMBROSE EASTMAN, Esq., of counsel for complainants:

Cross-int. 25. In your direct examination, given on Nov. 7, 1883, in answer to cross-int. 81, you stated that you found the stitch sewed by hand was made in such a manner as to be stronger than the one made by the Morley machine. In cross-int. 85, being asked if you did not report repeatedly that the Morley stitch held the buttons on more firmly than hand work, you answered, "I might have done so; that would have been a matter of business." I suppose, now that you have left the Morley Company's employ and are employed by

the Standard Company, your evidence in regard to the comparative efficiency of the two machines is to be taken just like your former reports, "as a matter of business," is it not?

(Objected to as improper cross-examination.)

Ans. I shall not answer that the same as I did the former. My experience since that time in the art of sewing on buttons has taught me that the hand stitch or a stitch made parallel with the line of buttons is stronger than one made crosswise of the line of buttons.

Cross-int. 26. How many of the eighty-four manufacturers whom you testified to have visited in Brockton make button boots?

Ans. All of them.

Cross-int. 27. How many of those eighty-four manufacturers do, on an average, twenty cases per day during the season of button boots?

Ans. I should say that one-half of them did.

Cross-int. 28. What means of knowing have you?

Ans. On my visit to Brockton on the 18th and 19th of February I was in all these different stitching-rooms and had conversation with nearly all foremen of the rooms as regards the quantity of work done, and should judge from that that nearly one-half of them made the amount of work referred to.

Cross-int. 29. How many cases per day during the season,
181 on an average, do the nine manufacturers make who were then using the Morley machines?

Ans. I should say about thirty.

Cross-int. 30. How many Lancaster machines are used by those eighty-four manufacturers in Brockton?

Ans. Not any.

Cross-int. 31. In answer to Int. 13 you state that twenty-five Lancaster machines in Lynn and five elsewhere have been put out since October, 1883. How many of these have been leased and the license fee of $150 paid?

Ans. Fifteen of them.

Direct examination resumed:

Int. 32. Do you know any reason why the eighty-four Brockton manufacturers are not using any Lancaster machines? If so, state it.

(Objected to as irrelevant.)

Ans. I do. The reason is we have not been able to fill their orders, as we had a number of orders ahead of them requiring to be filled first.

ALBERT H. SAWTELL.

Attest: FREEDON HUTCHINSON,
Special Examiner.

(Here follow diagrams marked pp. 182, 183, 184, 185, 186, 187, & 188.)

182

(Model.) 7 Sheets—Sheet 1.

J. H. MORLEY.

Machine for Sewing Buttons on Fabrics, &c.

No. 236,350. Patented Jan. 4, 1881.

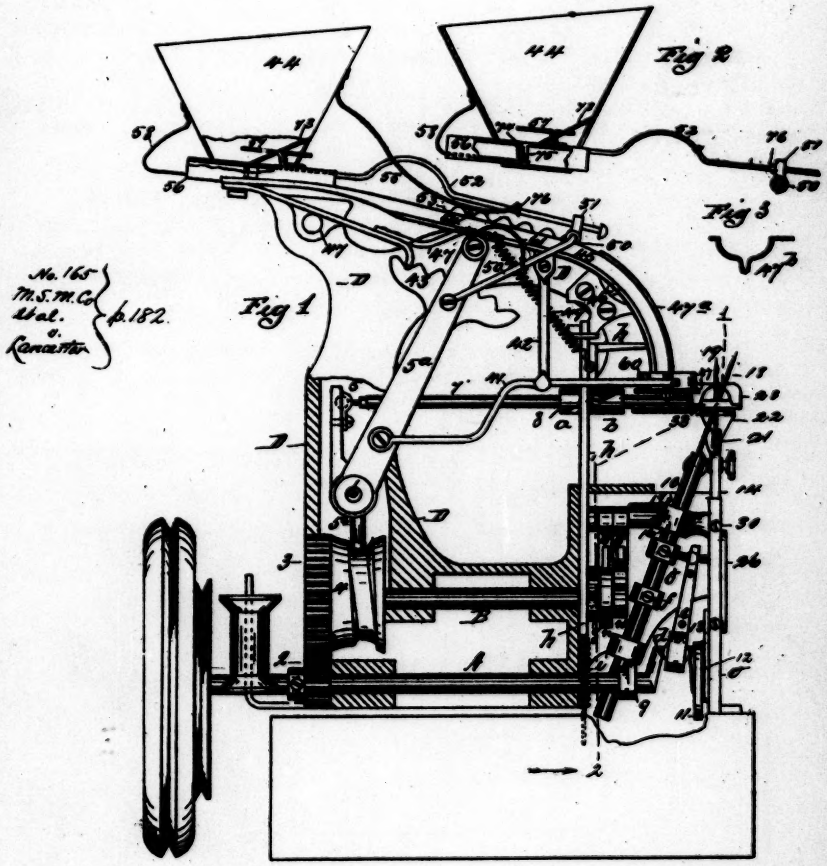

Witnesses
Wm H Chapin
G. Bill

Inventor
James H Morley
By Henry A Chapin
Attorney.

(Model.) 7 Sheets—Sheet 2.

J. H. MORLEY.

Machine for Sewing Buttons on Fabrics, &c.

No. 236,350. Patented Jan. 4, 1881.

No. 165.
M. S. M. Co. Mod.
v.
Lancaster.
p. 183.

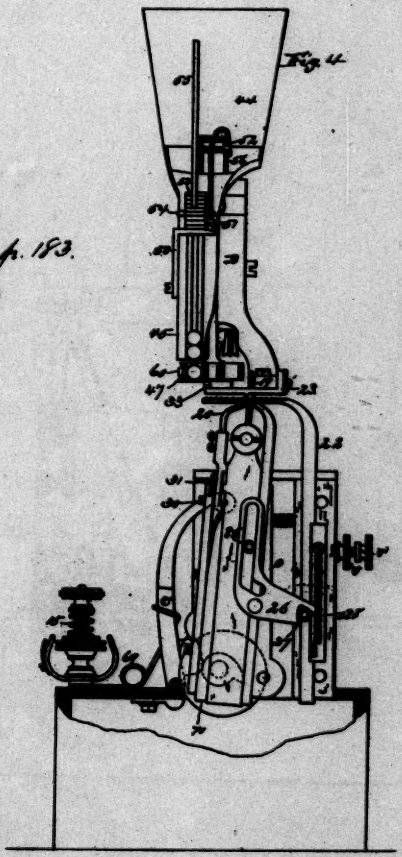

Witnesses:
F. O. McCleary.
A. Hansmann.

Inventor
James H. Morley
By Henry A. Chapin
Attorney

(Model.) 7 Sheets—Sheet 3.

J. H. MORLEY.

Machine for Sewing Buttons on Fabrics, &c.

No. 236,350. Patented Jan. 4, 1881.

No. 165.
M. S. M. Co. vol. p. 184
N. Lancaster.

Fig. 5.

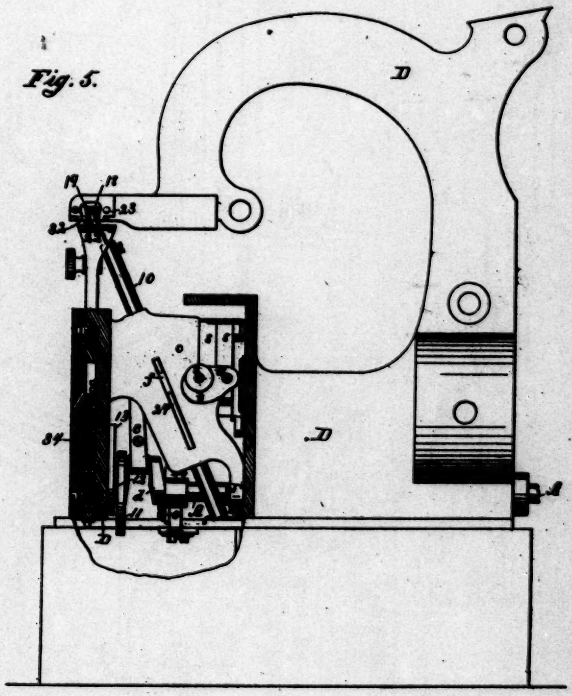

Witnesses:—
Cutting a Copy
William Paxton.

Jas. H. Morley
By his attorneys
H. A. Chapin

(Model.) 7 Sheets—Sheet 4.

J. H. MORLEY.

Machine for Sewing Buttons on Fabrics, &c.

No. 236,350. Patented Jan. 4, 1881.

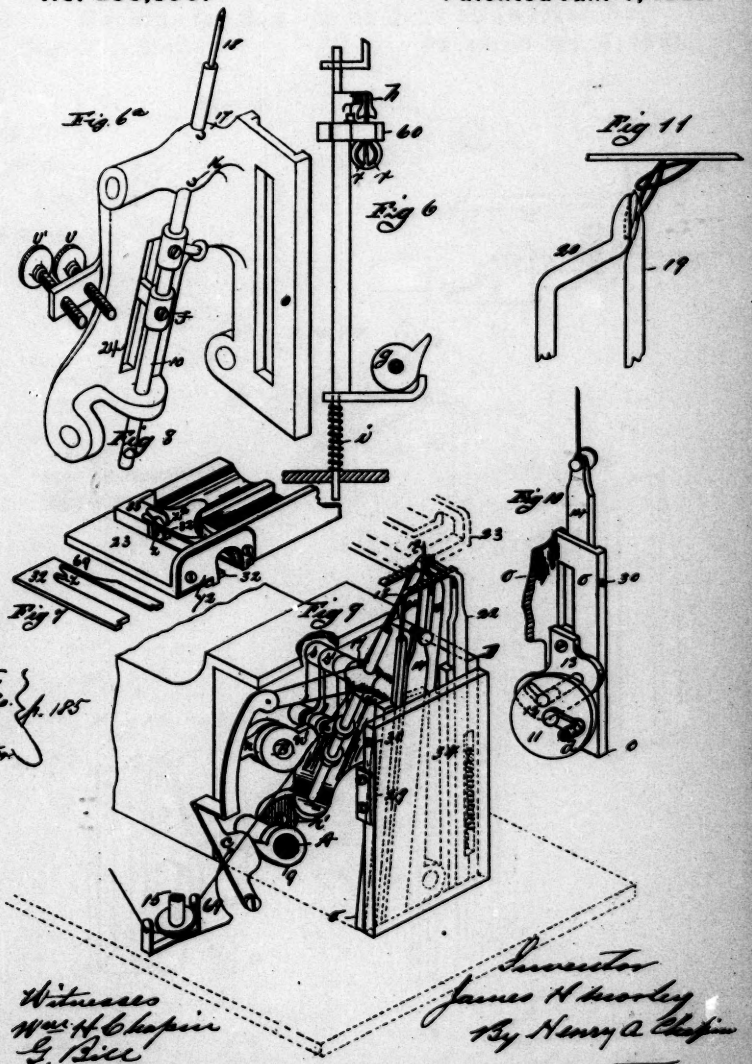

Witnesses
Wm. H. Chapin
G. Bill

Inventor
James H Morley
By Henry A Chapin
Attorney.

(Model.) 7 Sheets—Sheet 5.

J. H. MORLEY.

Machine for Sewing Buttons on Fabrics, &c.

No. 236,350. Patented Jan. 4, 1881.

No. 165. M. S. M. C. & al. v. Lancaster. } p. 186.

Fig 12

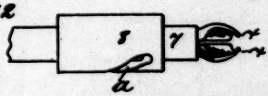

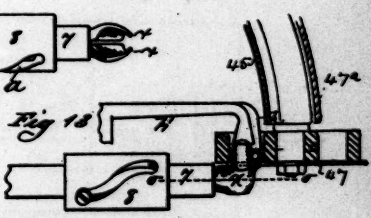

Fig 13

Fig 14

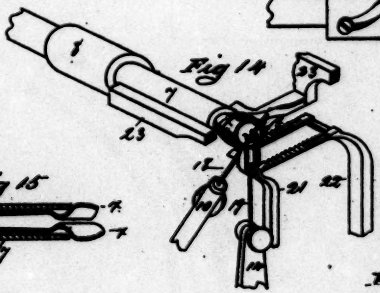

Fig 15

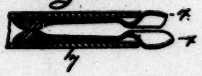

Fig 14a

Fig 16

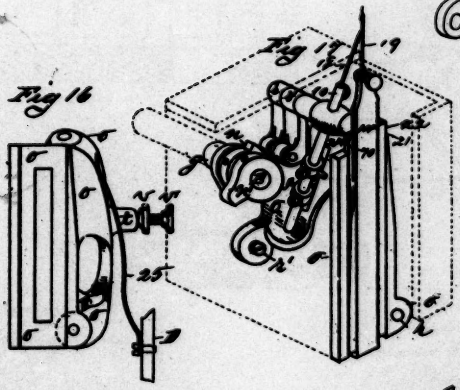

Witnesses
Wm. H. Chapin
G. Bill

Inventor
James H. Morley
By Henry A. Chapin
attorney.

(Model.) 7 Sheets—Sheet 6.

J. H. MORLEY.

Machine for Sewing Buttons on Fabrics, &c.

No. 236,350. Patented Jan. 4, 1881.

No. 165.
M. S. M. Co. vol. } p. 187.
Lancaster

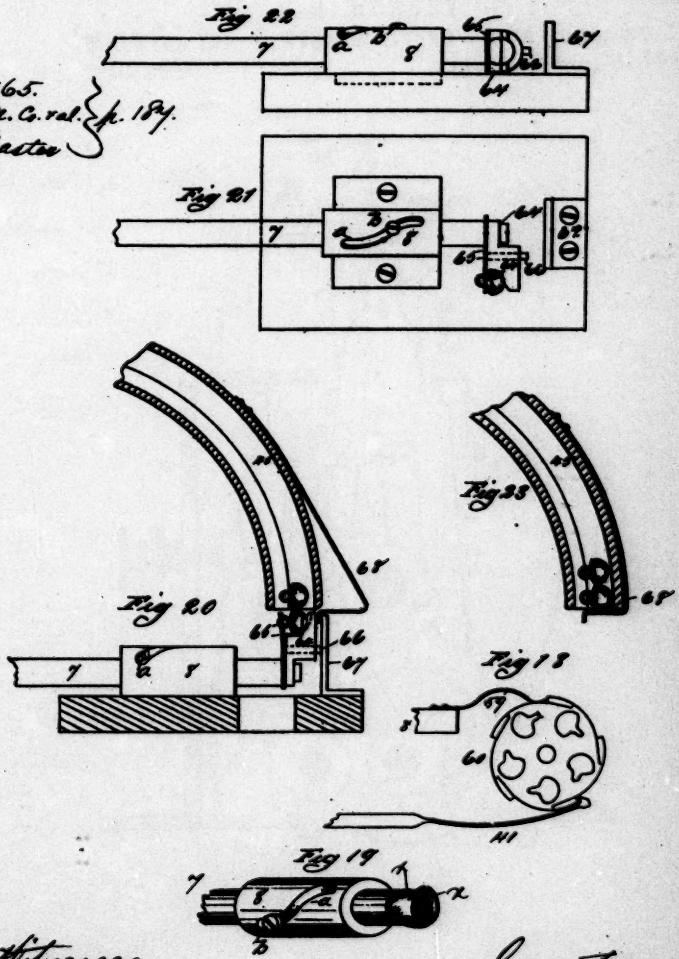

Witnesses
Wm H Chapin
G. Bill

Inventor
James H Morley
By Henry A Chapin
Attorney

188

(Model.) 7 Sheets—Sheet 7.

J. H. MORLEY.

Machine for Sewing Buttons on Fabrics, &c.

No. 236,350. Patented Jan. 4, 1881.

No. 165.
M. S. M. Co. et al.
v.
Lancaster
} p. 188

Fig. 24.

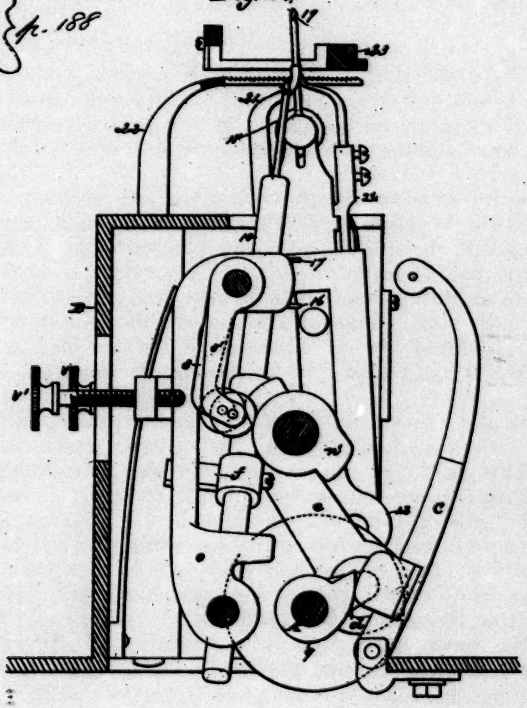

Witnesses:
F. O. McCleary.
A. Hansmann.

Inventor
James H Morley
By Henry A Chapin
Attorney

189 UNITED STATES PATENT OFFICE.

JAMES H. MORLEY, of Holyoke, Massachusetts, assignor of two-thirds to E. S. Fay, of Portsmouth, New Hampshire, and Henry E. Wilkins, of Springfield, Massachusetts.

Machine for Sewing Buttons on Fabrics, &c.

Specification forming part of Letters Patent No. 236,350, dated January 4, 1881; application filed June 23, 1880. (Model.)

To all whom it may concern:

Be it known that I, James H. Morley, a citizen of the United States, residing in Holyoke, in the county of Hampden and State of Massachusetts, have invented new and useful improvements in machines for sewing buttons on fabrics, &c., of which the following is a specification:

My invention consists in mechanism for automatically sewing shank-buttons onto fabrics, shoes, &c., and the objects of my invention are to form a double-threaded stitch on the top side of the material being sewed upon transversely to the direction of feed, and on the reverse side of the material two parallel lines of stitches at right angles to the first-named ones, to make alternately long and short stitches, and to so feed buttons to be sewed by said machines as to present them at the proper time and in the proper place to be operated upon.

I attain the above-named objects by the devices and construction illustrated in the accompanying drawings, in which—

Figure 1 is a sectional side elevation of my machine, with the take-up and tension removed, including the button-feed, partly in section, the end plate 34, Fig. 5, opposite the driving-wheel, being removed. Fig. 2 is a side elevation of the button-feed hopper and valve, partly in section, and the valve-rod in part, and a portion of its operating-arm. Fig. 3 is a cross-section of the button-feed trough. Fig. 4 is an end elevation of the machine and button-feed, with end plate 34 and cover 47* over the end of trough 45 removed. Fig. 5 is a rear elevation of the machine, partly in section, with the button-feed removed. Fig. 6 is a view of the button-plunger, its operating-cam, the button-turning wheel, and the front end of the button-clamp, showing their operative relations. Fig. 6* is a rear perspective view of the swinging needle-bar frame and attachments. Fig. 7 is a perspective view of the needle-plate. Fig. 8 is a perspective view of the cloth and needle-plates combined, and showing the needle-backer thereon. Fig. 9 is a perspective view, showing the tension device, the take-up and its operating-cam, the swinging needle-bar frame and its operating-cams, the needle-bars, the needles, the presser-foot, the helper-bar, the cast-off, and the end plate 34 of the machine, all in their operative relative positions, and showing the course of the thread from around the tension device to the needle, the needle-plate being partly shown in dotted lines. Fig. 10 is a

view of that portion of the swinging needle-bar frame carrying the vertical needle-bar, the cam-plate attached thereto, the disk provided with the crank-stud engaging with said cam-plate, and a part of the crank which actuates the inclined needle-bar. Fig. 11 is an enlarged view of the ends of the cast-off and the hooked needle, showing their operative relation to the loops formed in sewing. Fig. 12 is a view of the open side of the button-clamp, the front end of the clamp-carrier, and the spirally-grooved bearing. Fig. 13 is a view of the parts shown in Fig. 12, but with the button-clamps turned up to to receive a button, showing also a section of the button-turning wheel, the button-plunger, and the bottom of the button-feed trough, showing the relative operative position of said plunger, wheel, and button-clamp when a button (there shown) has been turned around and is being carried into said clamp. Fig. 14 is a perspective view of the end of the button-carrier and button-clamp turned over and holding a button with its shank flatwise toward the vertical needle-point, showing the inclined needle up through the said shank, the vertical needle, the presser-foot, and helper-bar in their relative positions, and a portion of the needle-plate. Fig. 14ª is a front perspective view of the needle-bar frame. Fig. 15 is a longitudinal section, through line *o o* of Fig. 13, of the front end of the button-carrier and clamps, showing the form of the button-clamps within the carrier and the manner of fastening them therein. Fig. 16 is an end elevation of the swinging needle-bar frame, showing an edge view of an actuating-spring attached to frame D, and the outer ends of two feed-adjusting screws working in said frame. Fig. 17 is a view of the swinging needle-bar frame, showing the relative positions of the two-needle bars therein, its pivot points, the pivoted cam-
189½ bearings thereon, and the feed-cams on the end of shaft B, adapted to operate upon said bearings. Fig. 18 is a plan view of the button-turning wheel, with button-pockets therein, and showing the end of the wheel-holder and pawl-hook contiguous to said wheel; Fig. 19 is a perspective view of the button-clamp, the forward end of the button-carrier, with its guide-pin, and the spirally-grooved bearing therefor. Fig. 20 illustrates a modified construction of the button-clamp and delivery end of the button-feed trough, showing a flexible button-stop attached to the latter, and showing, also, the receiving position of the modified button-clamp thereunder. Fig. 21 is a plan view of the modified construction of button-clamp, showing it turned over on its side and a button in the clamp. Fig. 22 is a side elevation of the parts shown in Fig. 21. Fig. 23 is a view of the end of the trough shown in Fig. 20, but with the button-stop in a position to prevent buttons from dropping out of it. Fig. 24 is a sectional view, taken through the line 1 2 of Fig. 1, looking in the direction of the arrow.

Like letters and numbers refer to like parts in the various figures.

Upon a suitable frame, D, I mount a shaft, A, adapted to be driven as is any ordinary sewing-machine shaft. Upon said shaft A is fixed a gear, 2, and a cam, 9. Said shaft A has also formed in it a crank, *d*, and on it, beyond said crank, is fixed a crank-disk, 11, in which is fixed a crank-stud, 12.

The gear 2 drives a second shaft, B, through a gear, 3, twice the size of gear 2, fixed to shaft B, which is located above and parallel to the shaft A.

The cam 9 on shaft A operates against the take-up *c* to move it from said shaft, and a spring, 69, throws it in the opposite direction.

The crank *d* in shaft A is connected with a pitman, *e*, by a ball-and-socket joint, to permit said pitman to have a vibratory motion.

The crank-stud 12, which is fixed in the crank-disk, 11, engages in the cam-slot in the cam-plate 13, which is secured, through a vertical slot in the swing needle-bar frame *o*, as seen in Fig. 10, to the vertical needle-bar 14, and reciprocating vertical motion is thereby given to said needle-bar by the revolution of shaft A.

The second shaft, B, has fixed upon it a grooved cam, 4, and three other cams, *g n n'*.

The grooved cam 4, through its engagement with the short arm 5^e of a lever, 5, operates to vibrate an arm, 5^a, fixed on the end of a transverse shaft, 6, rocking in the frame, and to which said lever 5 is secured.

The cam *g* operates to drive down the button-plunger *h* by striking against an arm extending from its vertical portion, as seen in Fig. 6, and a spring, *i* (there shown), carries the plunger up when released by the cam.

Cams *n* and *n'* operate against adjustable bearing-points on the swinging needle-bar frame *o* to swing it from shaft B with different movements, and a spring, 25, attached to frame D, Fig. 16, operates to throw said frame *o* towards said cams and against a stop, 29, on the edge of plate 34, Fig. 9.

The swinging needle-bar frame *o* is pivoted to frame D at *r'*, Figs. 5, 17, and 9, and to plate 34, Fig 5, at *r*, which latter plate is firmly secured to said frame D. The said needle-bar frame is provided with suitable bearings thereon, as shown, for the inclined needle-bar 10 to slide in, having a slot, 24, Fig. 5, in it directly back of said needle-bar, in which a guide-arm, *f*, attached to the needle-bar slides to prevent the needle-bar from turning. The end of said frame *o* back of plate 34 is provided with a vertically-grooved face, as seen in Figs. 4, 10, 16, and 17, and in said groove are fitted to slide the flat vertical needle-bar 14, heretofore spoken of, the helper bar 21, and the cast-off bar 70. In a portion of frame D adjoining said grooved end of the needle-bar frame *o* is the presser-bar, adjusted to slide in a groove in said frame D. A spring, 28, Fig. 4, draws said presser-bar upward.

On the face of the helper-bar 21, and lying against it and the needle-bar, is pivoted a slotted elbow-lever, 26. A pin, 85, set in the needle-bar, as shown, projects through said slot in lever 26, and the end of the horizontal arm of said lever extends over a pin, 27, in the presser-bar.

The operation of the cast-off 20 and its bar 70 relative to the needle bar 14 is well known, they being used in this connection in wax-thread sewing-machines.

The operation of the needle-bar, the helper-bar, and the presser-bar, in conjunction with the lever 26, applied as shown in Fig. 4,

is set forth in the patent of J. A. Davis, dated October 9, 1866, No. 58614.

For the purpose of properly securing the different feed-actions of the needle-bar frame *o*, as hereinafter explained, adjustable bearing-points *s s'*, against which cams *n n'* strike, are provided, which consist of two arms, as shown, pivoted on frame *o*, in the lower ends of which are placed friction-rollers, against which said cams strike in revolving.

In a projecting block or boss, *t*, on the rear side of frame *o* are placed two feed-adjusting screws, *v v'*, adapted to be screwed against the back sides of the pieces *s s'*, to cause their lower ends to project more or less beyond the side of said frame next to the cams *n n'*.

The pitman *e*, above mentioned as connected to crank *d* by a ball-and-socket joint, is connected by its upper end with a collar on the inclined needle-bar 10, Fig. 1, by an arm on said collar provided with a ball which fits a spherical cavity in said pitman, the latter being divided longitudinally into two parts, which are secured together, and upon the crank and said arm on the needle-bar collar by transverse screws, as shown.

On the frame *o* are fixed two thread-guide eyes, 16 and 17, as shown in Figs. 1, 6*, and 9.

In the vertical needle-bar 14 is secured a hooked needle,
190 19, and in the inclined needle-bar 10 is secured an eye-pointed needle, which operate with and by the devices herein described, as hereinafter set forth.

The cloth-plate 23, Fig. 8, is secured to the frame D over the needles, as shown in Figs. 1, 4, and 5. This plate is provided with a slot cut from near the front edge to the back edge. In suitable grooves formed in the edges of said slot in the cloth-plate is fitted the needle-plate 32, Fig. 7, and there secured by the removable plate 72. Upon the top of the cloth-plate, just at the rear end of the said slot therein, is fixed the needle-backer 33, provided with two short projecting points, z' z^2, reaching out over the said slot, and a point, z, at the base of the slot in the needle-plate lies under point z' of the needle-backer when the said plate is in position, as seen in Fig. 8. The needles pass up in the spaces each side of the point z' on the needle-backer.

The purpose of the narrowed part 69 of the needle-plate is explained farther on.

A thread-tension device of ordinary construction is located as shown in Fig. 4.

The lever 5 is connected with the end of a button-carrier, 7, by a ball-and-socket joint, as shown, the said parts being so adjusted one to the other as to allow of the requisite vertical slide in such joint to permit of free movement of the parts while said carrier is moved reciprocally by the action of said lever, and to permit the carrier to rotate reciprocally.

A tubular bearing, 8, is fixed on frame D, through which carrier 7 passes, and in said bearing is cut a spiral groove, *a*, and a screw-pin, *b*, is inserted through said groove into the said carrier, so that when the latter is moved back and forth through said bearing car-

rier 7 is caused to rotate, as aforesaid. In the end of said carrier opposite to lever 5 are fixed two flexible button-clamps, *x x*, as shown in Figs. 12, 13, 19, and 15, and provided with a button-socket between their projecting ends, as shown in Fig. 12. Said clamps are secured in a socket formed in the end of carrier 7, as seen in Fig. 15. Their shanks, from their cup portions inward, are flexible, their outer sides being straight. On the inner side of each one, near their rear ends, is formed a thick rounded projection, as seen, forming curved bearings for the rear ends of the clamps one against the other. Through the sides of the carrier, and projecting into the said thick portion of the clamps, are inserted four screws, two into each one, as shown in said Fig. 15. The said button-clamps, when they are in a backward position under the button-turning wheel 60, present their open side under one of the cups in said wheel, ready to take a button, and when moved forward they turn one-quarter over, as seen in Fig. 14, actuated by the above-described devices, which control the movements of carrier 7.

To the arm 5* is connected a pawl-hook, 41, engaging with a series of teeth formed on the periphery of the button-turning wheel 60. The said wheel is pivoted to frame D and adapted to be revolved in a horizontal plane intermittently by the action of said pawl-hook. Attached to any suitable part of the frame is a spring wheel-holder, 59, Fig. 8, adapted to spring behind the teeth on said wheel 60 and prevent it from being revolved backwardly by the forward movement of the pawl-hook. A button-plunger, *h*, whose operating devices have already been described, moves down against a button brought around under it by wheel 60, pushing it into the clamp-jaws *x x* beneath said wheel.

A button-hopper, 44, Figs. 1 and 2, to receive the buttons to be sewed on, is constructed with an inclined bottom, 73, to cause the buttons to gravitate to the left-hand portion thereof, and in said bottom is cut a passage for the hopper-valve 56 to slide through, said hopper-valve being a short inverted flat-bottomed trough, and above said passage, in said bottom, is a second opening, through which the end of a hopper-valve guard, 57, is moved back and forth with and by the hopper-valve, to which it is attached.

That portion of the top side of the hopper-valve which is exposed under the pile of buttons in the hopper is provided with a single circular opening, 74, and projecting downward from the rear side of this circular opening is a short arm, 75. Attached to the rear side of the hopper, and extending into the end thereof under the arm 75, is a spring hopper-valve bottom, 58, the end of which in the valve is adjustable vertically by bending up and down. When the hopper-valve moves to the left under the mass of buttons in the hopper the end of the hopper-valve guard 57 which projects over the opening 74 in the valve prevents more than one button from passing under it and into the opening in the valve. The spring-bottom 58 is adjusted up or down to give room for a large or small class of buttons. Thus, when a button drops through the opening 74 it falls upon the spring-bottom 58, and the returning movement of the valve causes the arm 75 to draw against the button, carrying it out

from under the hopper into the straight portion of a feed-trough, 45.

A rod, 52, is secured to the hopper-valve, and passes through a ring, 51, on the end of an arm, 50, which is pivoted to arm 5*, and, reaching up therefrom to the edge of the trough 45, extends across its top. The end of rod 52 is headed, as shown, and a ring, 76, is fixed on it between the head and hopper-valve. Thus, when arm 5* is vibrated arm 50 is drawn longitudinally back and forth on the upper side of trough 45, causing ring 51 to carry the hopper-valve into the hopper by abutting against ring 76, and to draw it out by striking the head of rod 52. A flexible corrugated strip, 53, is attached pivotally to that portion of arm 50 which lies across trough 45, and has a cross-bar, 54, attached to it to prevent it falling below the edge of the
191 trough, and when arm 50 is moved, as just described, said corrugated strip is moved longitudinally over the buttons in the trough and operates upon them, as hereinafter described.

A light spring, 55, is attached to the hopper, and its free end bears upon the top of the corrugated strip to hold it down.

The hopper-trough 45, to one end of which the hopper 44 is attached, is pivotally secured to frame D at 46, Fig. 1, and is caused to have a limited vibratory movement, in order to facilitate the movement of the buttons, as follows:

A lever, 47, is pivoted on frame D, on one end of which the hopper end of the trough rests, as seen in Fig. 1. A downwardly-bent arm on said lever 47 is arranged to ride on the edge of a serrated segment, 43, secured to arm 5*, and when said arm vibrates the hopper and trough are caused to be shaken for the purpose just stated. A continuation of lever 47 reaches up under the trough, as shown, and thereto is attached a spring, 49, to draw said lever against the segment 43.

A trough-cover, 47*, is fixed to frame D, and the end of the trough vibrates slightly under it, for the purpose hereinafter explained.

The operation of my sewing-machine is as follows, viz: The thread is passed from the spool around the tension device, thence through the guide-eye 16 on the swinging needle-bar frame *o*, thence through the end of the take-up and back through the second guide-eye 17, on the said swinging frame, and then through the eye of the inclined needle, and the end of the thread is left as in ordinary machines. To sew stitches such as are described below, of uniform length, the cam-bearings *s s'*, pivoted on frame *o*, are adjusted by screws *v v'*, so that each one, when operated upon by its cam *n* or *n'* on shaft B, will cause the frame *o* to be swung an equal distance from the center of said shaft B. To sew alternately long and short stitches, either one of said cam-bearings may be adjusted by said screws to cause the needle-bar frame to be swung alternately more and less. The eye-pointed needle is a common Howe sewing-machine needle, and rises through the fabric, the supply side of it coming against the back-up, which throws the loop in the opposite direction for the hook-needle to take it. The eyed needle is retracted slightly to cause a loop to be formed on the side of it opposite the

back-up, as in any ordinary shuttle-machine. The vertical hook-needle rises through the material and passes between the needle and the said loop on the side of it. The frame supporting both needle-bars now swings, causing the needles which are up through the materials to feed the latter along between the needle-plate and presser-foot. The hook-needle is in such position that when the eyed needle moves down the thread drawn by the take-up around the hook-needle will be engaged by the hook. Thus, while one end of the thread is held by the fabric and around the hook-needle, the take-up draws from the spool the requisite quantity of thread for this stitch, yielding the thread up as the hook returns back through the fabric with the loop. The hook now draws the loop down through the fabric and between it and the loop cast off. The take-up has now let off the thread, and the swinging needle-bar frame now returns to its starting-point, actuated by spring 25. The helper-bar begins to rise in advance of the hook-needle against the under side of the fabric, the presser-foot descending simultaneously with the rising of said bar. The latter holds the cloth against the needle-plate while the hook-needle passes through it, and remains against it while the hook-needle draws out, when the presser-foot returns against the fabric, holding it in position, while the swinging frame returns to its starting-point, as aforesaid. The hook-needle penetrates the fabric at a point some distance to one side of the eye-pointed needle, so that the aforesaid movements of the stitching devices produce the first stitch, carrying the thread from one perforation to the other across the upper face of the material in a line transverse to the direction in which the latter is being fed. In forming the next stitch the loop of the first stitch which was drawn down through the fabric, as above described, is held by the hook-needle. The eye-pointed needle now moves upward, drawing its thread-supply from the slack portion of the thread between the tension device and the needle; the hook-needle, around the barbed end of which the first loop still is, follows it in the manner described in making the first stitch, but passing through the said loop. The cast-off follows the upward movement of the hook-needle and passes between the loop of the first stitch and the hook-needle. The hook-needle now descends, as before described, drawing the loop of the second stitch back of the cast-off and down through the loop of the first stitch, which is held open for that purpose by the cast-off. The hook-needle continues to descend, carrying the loop with it, until its point is below the point of the cast-off. The latter then follows, moving down and casting off said loop of the second stitch onto the loop of the prior stitch, as shown in Fig. 11, thereby making a common loop-stitch, the loop of the last stitch being held by the hook-needle, as aforesaid, ready for a succeeding stitch. The said stitch is a double-threaded transverse stitch on the top side of the material, and on the under side thereof there are two parallel lines of stitching.

The hereinbefore-described construction of the take-up devices of this machine operate, conjointly with the swinging frame, to draw such an amount of thread as may be required for the stitch which the machine may be adjusted to make, be it longer or shorter, or

alternately long and short stitches, and such conjoint operation is as follows: My take-up begins to draw the thread when the eye
192 of the eyed needle leaves the fabric, the swinging frame, when the take-up so draws, being at its farthest point from the starting-point or stop, and finishes drawing the thread before the swinging frame begins to return to its said starting-point, and as the said frame and take-up now swing toward each other the thread is slacked up and left free for the above-described operation of the hook upon it. The swing of the take-up is uniform, but the points of resistence—*i. e.*, the said two thread-guide eyes on the swinging frame, through which the thread draws in two lines—assume positions at varying distances from the swinging end of the take-up, according to the length of the needle-feed movement, thus causing the length of the thread drawn by the said conjoint action of these elements to be proportionate to the length of the stitch.

To form stitches of different lengths, such as are adapted to sew buttons onto shoes, and so form them to lock the button-stitch into the fabric that the portion of the thread which secures the button shall not be liable to slip, and to feed to the machine automatically shoe-buttons, and cause them to be sewed onto leather or other material at the requisite distances apart, the machine and button-feeding devices operate as follows: The screws *v v'* are turned against the pivoted cam-bearings *s s'*, as above described, so as to cause the cams *n' n* to act upon the swinging frame so that the swinging movements thereof are alternately short and long. The shoe-buttons are fed into the hopper 44, and they fall, one by one, into the hopper-valve 56, through the hole 74 in the top thereof, the action of these parts being properly timed to operate with the sewing-on devices so as to supply a button from the hopper to the feed-trough as often as one is delivered from the lower end of the latter. The shaking of the hopper and feed-trough by the above-described devices, together with the inclined position of the trough, causes the buttons to gravitate toward the delivery end of the trough. When the buttons first emerge from the hopper-valve they lie in the upper flat-bottomed portion of the trough in various positions; but as they pass along to and over that part of it having the V-shaped groove along its bottom, midway between its sides and under the corrugated strip 53, any buttons whose shanks may not have fallen into said V-shaped groove are turned over by said strip in its reciprocating movements, compelling them all to assume a uniform position—*i. e.*, all with their faces up and their shanks in said groove edge to edge. This action of the corrugated strip upon the buttons to place them is owing to the fact that there is room for the buttons to pass under said strip if they are in proper position in the groove, and not be hit by it; but if they lie on their sides or faces they cannot pass under it without being hit by it and turned over. Thus the buttons pass towards the delivery end of the trough 45, the lower end of which has a continuous vibratory motion against the fixed cover 47*, preventing the moving column of buttons from clogging in their passage and allowing them to drop freely from the end of the trough.

As above described, the button-turning wheel 60 is located under

the end of the trough and over a fixed bottom, 47, cut away on one edge to allow the button-carrier 7 to pass under it and to let a button pass from a pocket in the wheel to the clamp-jaws. Said wheel receives the buttons, one by one, into its pockets, and is turned so far around, after receiving a button and before delivering it, as to cause the shank of that button to lie toward the needles instead of from them, as it did when first dropped into the wheel. When said button has been, by said wheel, carried around under the button-plunger *h* the latter will descend, pushing said button through the wheel between the jaws *x x* of the button-carrier, which lie open directly under the pocket in the wheel from which the button has been so conveyed to them, and, slightly forcing said jaws apart, the button is there held, its shanks still in the same position as when it was in the trough, so far as the opening through its eye is concerned. The button-carrier now moves forward, turning as it moves, carrying the button forward and turning it one-quarter over, so that the opening through its shank is moved over the point of the eyed needle beneath it, with its narrow portion lying upon the thin part 69 of the needle-plate, Fig. 7, and its head upon the material back of it, the shank lying under the projections z' z^2 of the needle-backer 33, its outer side lying between the said projections z' of the backer and z of the needle-plate. Thus the shank is in a measure clamped flatwise between said points, which co-operate with the clamp-jaws of the button-carrier to hold the button firmly while the eyed needle passes up through the fabric and the eye of the button-shank.

The above description explains the operation of the machine in conveying a button from the hopper onto the leather or fabric, ready to be sewed on.

In operating the machine to sew on buttons, the operator places the leather between the presser-foot and needle-plate, as heretofore described, and makes a stitch through it before sewing through the shank of the button, this stitch being for the purpose of locking the end of the thread in the leather. The machine now feeds for a short stitch, the button being placed upon the leather, as just described, and the eyed needle passes up through the shank of the button, and the hooked needle, passing up outside of the button-shank and operating as aforesaid, engages with the loop above the button-shank. The machine now feeds the distance required between the buttons; after which the stitch is completed, as aforesaid,
193 and in this case a double thread is drawn down over the button-shank, fastening it there firmly, and the said operations are repeated. The direction of feed of the machine being from the needle-backer 33, the buttons pass out between the sides of the slots in the needle and cloth plates, which lead to the outer edge thereof. The formation of the stitch on the material in a line transverse to the direction of feed of the machine permits the employment of a needle-plate, as described, having in it a slot constituting a clear passage from the point between the needles where the stitch is formed to the outer edge of the needle-plate.

Figs. 20, 21, and 22 show a modified construction of the button-clamp on the end of the button-carrier 7, and illustrate the manner

of making a clamp to operate to take a button from the end of the button-feed trough when the latter terminates at the right of the needles, there being attached to the trough a flexible button-stop, 68, and to the machine a stop-plate, 67, to co-operate with the parts of the button-clamp to deliver buttons to the latter and to cause the release of the button when it is carried over the needles to be operated upon. This construction dispenses with the use of the button-turning wheel 60 and its operating devices, and also with the button-plunger *h*, and operates as follows:

The button-carrier 7 is operated as already described, carrying the button-clamp under the end of the feed-trough, as seen in Fig. 20. In so moving the clamp-head 64 strikes against the end of the button-stop 68, springing it away from under the button-column in the trough, and allowing a button to drop between the head and a spring, 65, the latter having been bent back, as seen in Fig. 20, to allow the button to drop freely therebetween. Said spring 65 is bent into the position seen in Fig. 20 by the impingement of pin 66 against the stop-plate 67, and upon the return movement of the carrier 7 backward spring 65, which is slotted to let the shank of the button project through it, as shown, springs against the button, holding it firmly, and the carrier retires and rolls over into the position seen in Fig. 21, letting the stop 68 spring across the end of the trough, and bringing the shank of the button flatwise over the needles, in proper position to be operated upon by them, and when it is sewed on the feed movement of the leather will cause the button to be drawn out of the clamp.

Having thus described the machine and constructions set forth in the drawings, I wish it to be understood that the same is only one of different mechanisms which I have contemplated, and which may be effectually employed for carrying out the main feature of my invention, to wit, the automatic mechanical sewing of buttons to a fabric. Thus, different means may be adopted for carrying the thread through the eye of the button into the fabric—as, for instance, passing the hooked needle through said eye to a position to seize the thread from the straight needle or form a suitable carrier and then draw the loop down through the fabric to be secured beneath by a shuttle or needle thread, or the eye-pointed needle may be used in connection with a loop-spreader and shuttle for carrying a thread through the loop, a single thread or two threads being used. It will further be understood that wires may be sometimes substituted for threads, and that other feed mechanisms may be employed, the needles moving with but not controlling the fabric, as in the construction described.

I claim—

1. The combination, in a machine for sewing shank-buttons to fabrics, of button-feeding mechanism, appliances for passing a thread through the eye of the buttons and locking the loop to the fabric, and feeding mechanism, substantially as set forth.

2. The combination, in a machine for sewing shank-buttons to fabrics, of a needle and operating mechanism, appliances for bringing the buttons successively to positions to permit the needle to pass

through the eye of each button, and means for locking the loop of thread carried by the needle to secure the button to the fabric, substantially as set forth.

3. The combination, in a sewing-machine, of two independent needle-bars, needles, and operating devices, a movable frame carrying both needle-bars at an angle to each other, and arranged, as described, so that the needles shall penetrate the cloth at different points on lines transverse to the line of feed, substantially as set forth.

4. The combination, with the frame D, needle-bar frame *o*, pivoted to frame D, and adjustable cam-bearings *s s'*, of the shaft B, cams *n n'* on said shaft, and a suitable spring to swing said frame *o* toward said cams, substantially as and for the purpose set forth.

5. The combination, with the needle-bar frame *o*, of the needle-bars 10 and 14, the eyed needle 18, the hook-needle 19, and the cast-off 20, helper-bar 21, presser-foot 22, elbow-lever 26, and devices for operating said parts, substantially as and for the purpose set forth.

6. The combination, with swinging needle-bar frame *o* and the needle-bars 10 and 14, of the crank *d*, shaft A, and the studded crank-disk on said shaft, pitman *e*, and the cam-plate 13, substantially as and for the purpose specified.

7. In a needle-feed sewing-machine, the combination, with the needle-plate 32 and the presser-bar operating in the frame of the machine, of the needle-bar frame *o*, needle-bars 10 and 14 and their needles, the helper-bar 21, and cast-off 20, adapted to be oscillated by and with the needle-bar frame, and actuating mechanism, substantially as and for the purpose described.

8. The combination, in a machine for sewing buttons to fabrics, of button feeding and sewing appliances, substantially as set
194 forth, and feeding appliances and operating mechanism whereby the feeding devices are moved alternately different distances to alternate short button-stitches with long stitches between the buttons, as specified.

9. The combination, with the frame D, swinging needle-bar frame *o*, the needle-bars 10 and 14, and their needles carried thereby, said frame *o* being provided with the thread-guide eyes 16 and 17, and adapted to swing in frame D with different degrees of oscillation, of the thread take-up *c*, adapted to swing with regular vibratory movements, and appliances for operating the frame *o*, needle-bars, and take-up, substantially as and for the purpose set forth.

10. The combination, with the cloth-plate 23, having a slot from one edge inwardly therein, as shown, of the slotted needle-plate 32, constructed with the projection *z* at the base of its slot, and the narrow side 69 at one side thereof, and the needle-backer secured to the top of said cloth-plate and provided with the projections *z'* and z^2, substantially as and for the purpose set forth.

11. The needle-plate 32, constructed with an unobstructed passage in it, as shown, from the point between the needles where the stitch is formed to the outer edge thereof, combined with devices for feeding buttons above said plate, and a presser-foot below the same, substantially as and for the purpose specified.

12. The combination, with cam 4, shaft B, lever 5, and shaft 6, of the button-carrier 7, having pin *b* therein, and having the clamp-jaws *x x* secured in one end thereof, and the spirally-slotted bearing 8, substantially as and for the purpose set forth.

13. The combination, with button-sewing appliances, of a trough, appliances for carrying the buttons successively from the trough to the sewing devices, and mechanism for operating said appliances and sewing devices, as set forth.

14. The combination, with the frame D and button-feed trough 45, pivoted to frame D, of the lever 47, spring 49, and the serrated segment 43, arm 5^a, and operating mechanism, substantially as and for the purpose described.

15. The combination, with the trough 45, provided with the longitudinal channel 47^b, adapted to the reception of the shanks of the buttons therein, as shown, of the corrugated strip 53, provided with the cross-bar 54, and mechanism for imparting a reciprocating longitudinal movement to the strip over the said trough, substantially as and for the purpose described.

16. The combination, with the hopper-valve 56, of the headed valve-rod 52, provided with the ring 76, the arm 50, provided with the ring 51, and the arm 5^a, and mechanism for vibrating said arm, substantially as and for the purpose set forth.

17. The combination, with the hopper and feed-trough, of the corrugated strip 53 and the spring 55, secured to the hopper 44, and devices for reciprocating said strip, substantially as and for the purpose set forth.

18. In combination, the hopper 44, provided with the inclined bottom 73, having openings therein, as shown, the hopper-valve provided with the guard 57, the opening 74, and the arm 75, mechanism for operating the hopper-valve, and the spring valve-bottom 58, substantially as and for the purpose set forth.

JAS. H. MORLEY.

Witnesses:
WM. H. CHAPIN.
C. S. PARKHURST.

(Here follow diagrams marked pp. 195, 196, 197, 198, 199, and 200.)

201 UNITED STATES PATENT OFFICE.

JOSEPH MATHISON, of Lynn, Massachusetts, assignor to himself and William D. Allen, of same place, and C. B. Lancaster, of Boston, Massachusetts.

Machine for Sewing on Buttons.

Specification forming part of Letters Patent No. 268,369, dated November 28, 1882; application filed August 1, 1882. (No model.)

To all whom it may concern:

Be it known that I, Joseph Mathison, of Lynn, in the county of Essex and State of Massachusetts, have invented certain improve-

(No Model.) 6 Sheets—Sheet 1.

J. MATHISON.

MACHINE FOR SEWING ON BUTTONS.

No. 268,369. Patented Nov. 28, 1882.

Fig. 1.

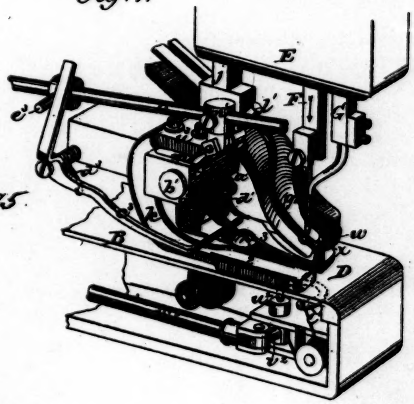

No. 165.
M. S. M. Co.
et al.
v.
Lancaster.
pr. 195

Fig. 2.

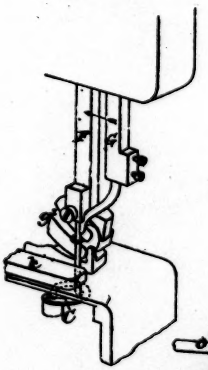

Fig. 3.

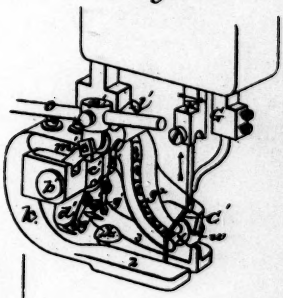

Fig. 4.

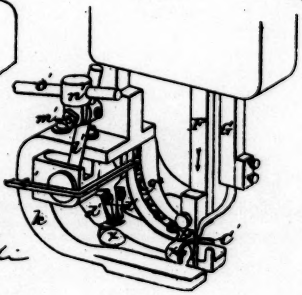

Witnesses:
Joseph Lawton
A. L. White

Inventor:
Joseph Mathison
by Wright Brown
Atty

12. The combination, with cam 4, shaft B, lever 5, and shaft 6, of the button-carrier 7, having pin *b* therein, and having the clamp-jaws *x x* secured in one end thereof, and the spirally-slotted bearing 8, substantially as and for the purpose set forth.

13. The combination, with button-sewing appliances, of a trough, appliances for carrying the buttons successively from the trough to the sewing devices, and mechanism for operating said appliances and sewing devices, as set forth.

14. The combination, with the frame D and button-feed trough 45, pivoted to frame D, of the lever 47, spring 49, and the serrated segment 43, arm 5^a, and operating mechanism, substantially as and for the purpose described.

15. The combination, with the trough 45, provided with the longitudinal channel 47^b, adapted to the reception of the shanks of the buttons therein, as shown, of the corrugated strip 53, provided with the cross-bar 54, and mechanism for imparting a reciprocating longitudinal movement to the strip over the said trough, substantially as and for the purpose described.

16. The combination, with the hopper-valve 56, of the headed valve-rod 52, provided with the ring 76, the arm 50, provided with the ring 51, and the arm 5^a, and mechanism for vibrating said arm, substantially as and for the purpose set forth.

17. The combination, with the hopper and feed-trough, of the corrugated strip 53 and the spring 55, secured to the hopper 44, and devices for reciprocating said strip, substantially as and for the purpose set forth.

18. In combination, the hopper 44, provided with the inclined bottom 73, having openings therein, as shown, the hopper-valve provided with the guard 57, the opening 74, and the arm 75, mechanism for operating the hopper-valve, and the spring valve-bottom 58, substantially as and for the purpose set forth.

JAS. H. MORLEY.

Witnesses:
WM. H. CHAPIN.
C. S. PARKHURST.

(Here follow diagrams marked pp. 195, 196, 197, 198, 199, and 200.)

201 UNITED STATES PATENT OFFICE.

JOSEPH MATHISON, of Lynn, Massachusetts, assignor to himself and William D. Allen, of same place, and C. B. Lancaster, of Boston, Massachusetts.

Machine for Sewing on Buttons.

Specification forming part of Letters Patent No. 268,369, dated November 28, 1882; application filed August 1, 1882. (No model.)

To all whom it may concern:

Be it known that I, Joseph Mathison, of Lynn, in the county of Essex and State of Massachusetts, have invented certain improve-

(No Model.) 6 Sheets—Sheet 1.

J. MATHISON.

MACHINE FOR SEWING ON BUTTONS.

No. 268,369. Patented Nov. 28, 1882.

Fig. 1.

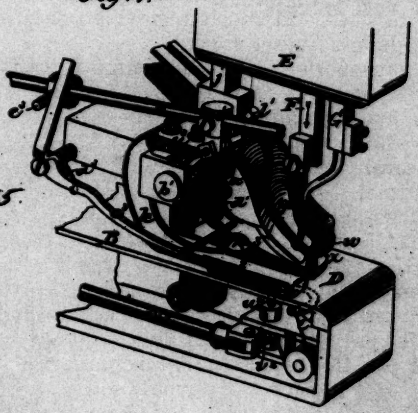

No. 165.
M. S. M. Co.
et al.
v.
Lancaster.
} p. 195.

Fig. 2.

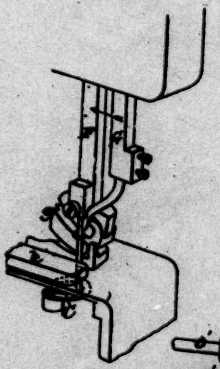

Fig. 3.

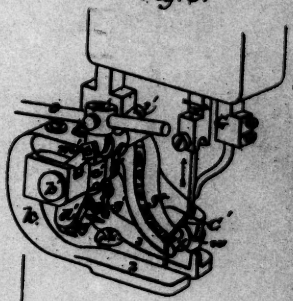

Fig. 4.

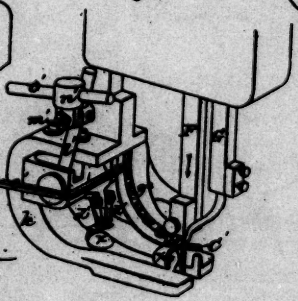

Witnesses:
Joseph Cattle
A. L. Whiti

Inventor:
Joseph Mathison
by Wright & Brown
Attys.

(No Model.) 6 Sheets—Sheet 2.

J. MATHISON.

MACHINE FOR SEWING ON BUTTONS.

No. 268,369. Patented Nov. 28, 1882.

No. 165.
M. S. M. Co. vs. } fo. 196.
Lancaster.

Fig. 5.

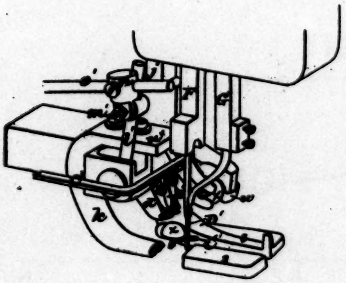

Fig. 6.

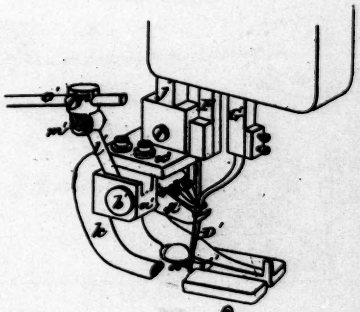

Fig. 7.

Fig. 8.

Fig. 9.

Fig. 10.

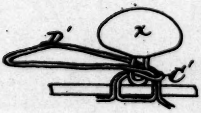

Fig. 11.

Fig. 12.

Witnesses
Joseph Lawler
A. L. White

Inventor:
Joseph Mathison
by Wright Brown
Attorneys

197

(No Model.) 6 Sheets—Sheet 3.

J. MATHISON.

MACHINE FOR SEWING ON BUTTONS.

No. 268,369. Patented Nov. 28, 1882.

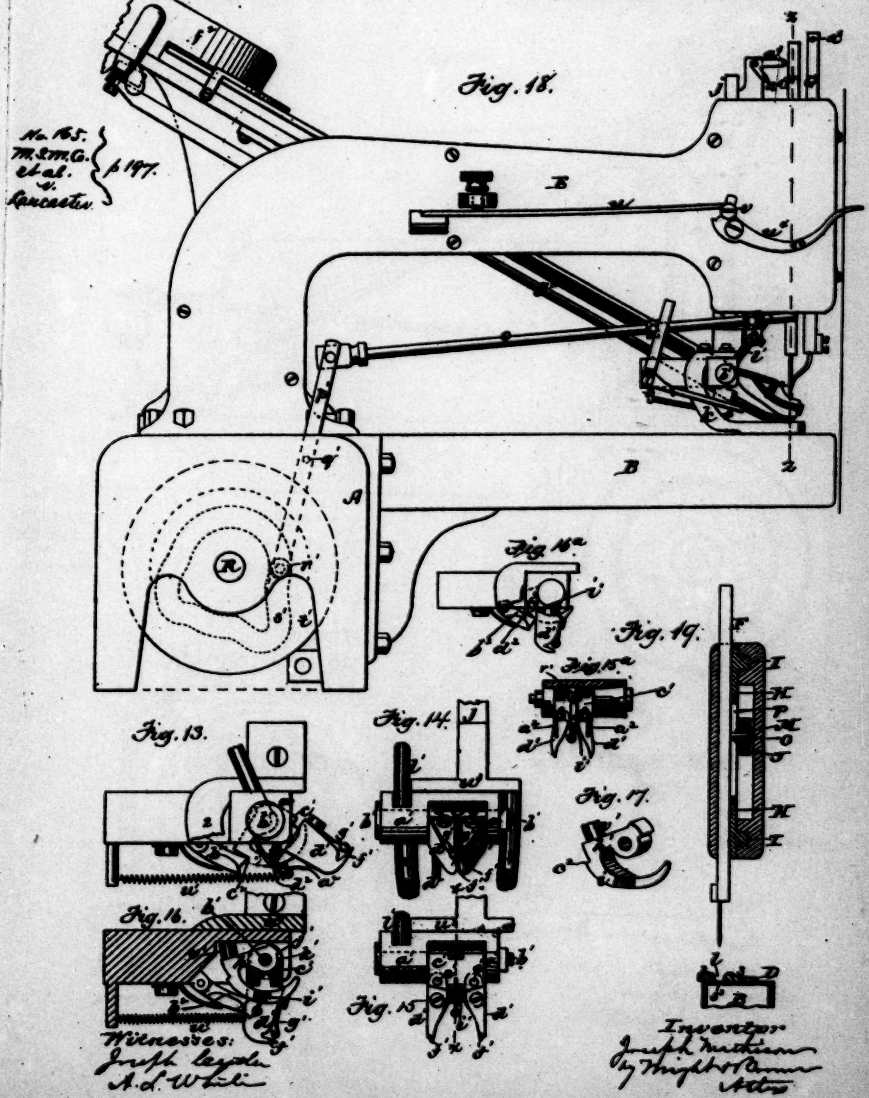

(No Model.) 6 Sheets—Sheet 4.

J. MATHISON.

MACHINE FOR SEWING ON BUTTONS.

No. 268,369. Patented Nov. 28, 1882.

Fig. 20.

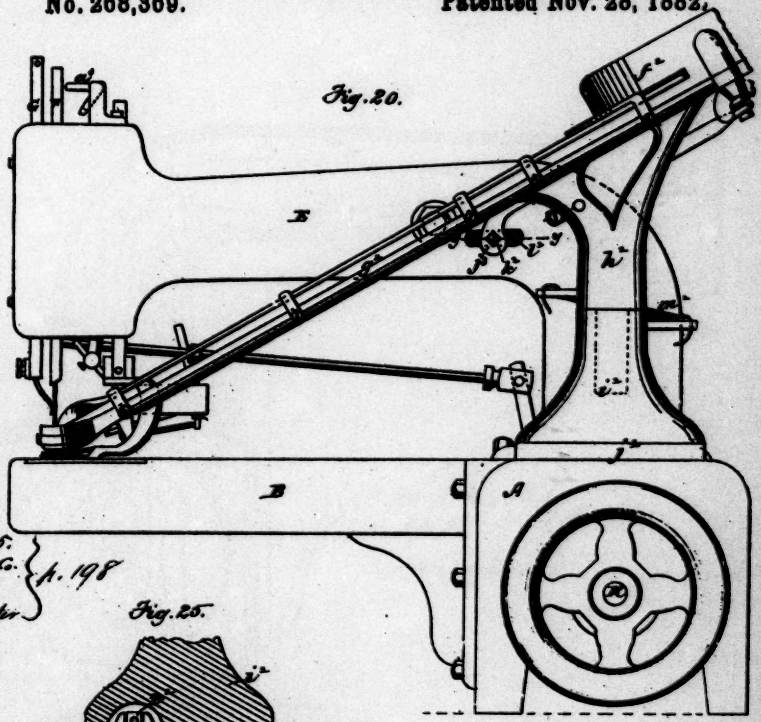

No. 165. M. S. M. C. et al. v. Lancaster } A. 198

Fig. 25.

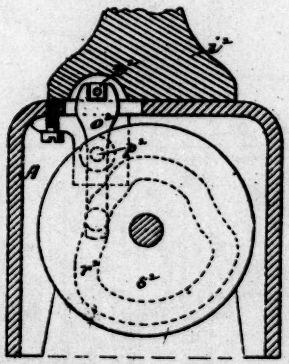

Fig. 21.

Fig. 20a

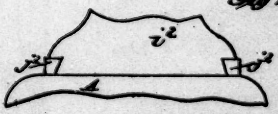

Witnesses:
Joseph Coyle
A. L. Wilkie

Inventor:
Joseph Mathison
by Wright Brown
Atty

199

(No Model.) 6 Sheets—Sheet 5.

J. MATHISON.

MACHINE FOR SEWING ON BUTTONS.

No. 268,369. Patented Nov. 28, 1882.

Fig. 23.

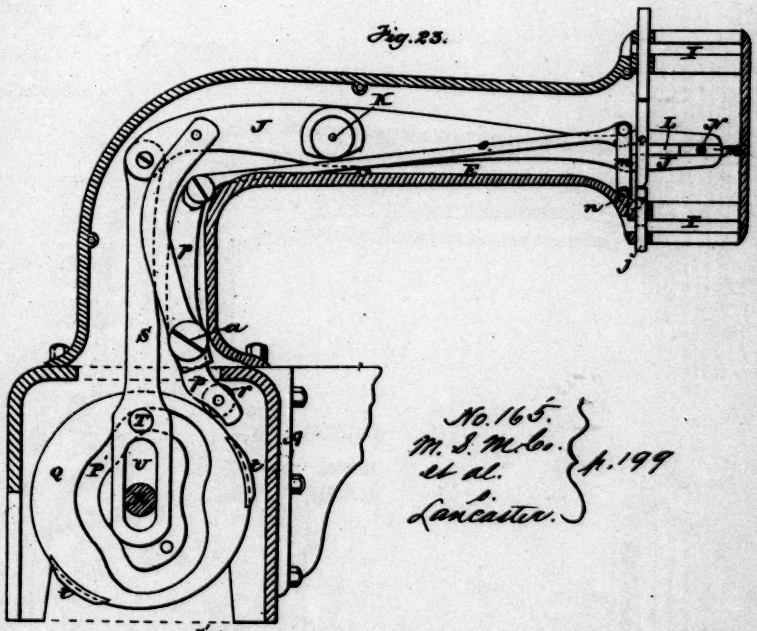

No. 165.
M. J. M. Co.
et al.
Lancaster.
p. 199

Fig. 22.

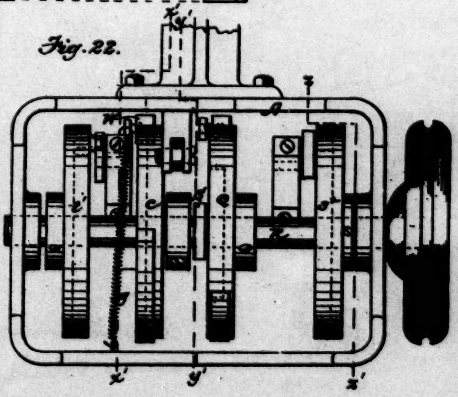

Witnesses:
Joseph Lowber
H. L. White

Inventor:
Joseph Mathison
by Wright Brown
Attys.

200

(No Model.) 6 Sheets—Sheet 6.

J. MATHISON.

MACHINE FOR SEWING ON BUTTONS.

No. 268,369. Patented Nov. 28, 1882.

No. 165.
M. S. M. Co.
et al.
v.
Lancaster
} p. 200

Fig. 24.

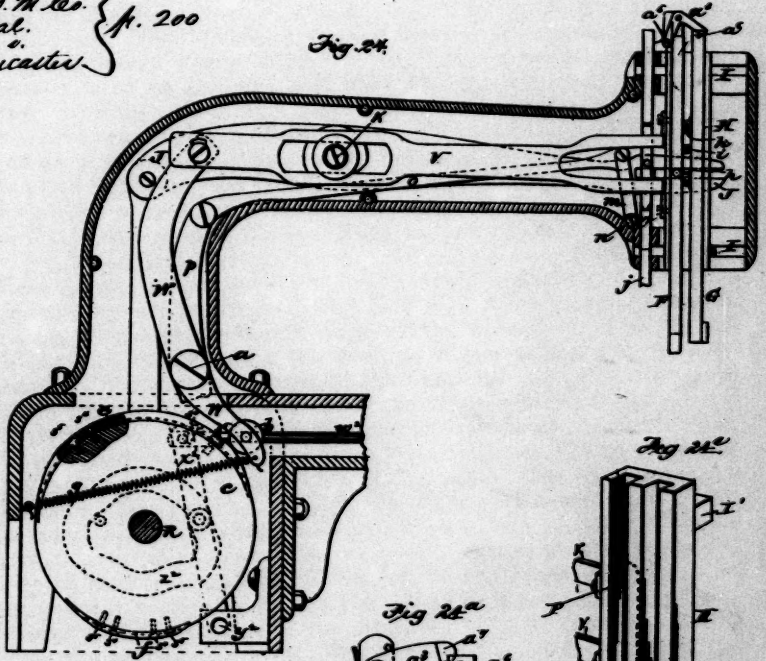

Fig 24a

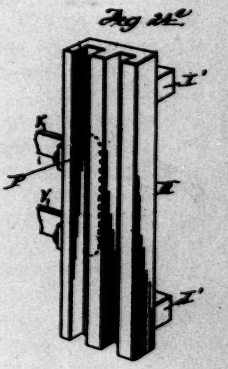

Fig 24b

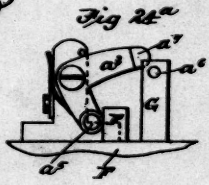

Fig 24c

Fig 24d

Fig 24e

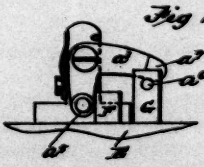

Witnesses:
Joseph Battle
A. D. White

Inventor:
Joseph Mathison
by Wright Brown
Atty.

ments in machines for securing buttons to material, of which the following is a specification:

This invention has for its object to provide a machine adapted to secure a series of buttons to a boot or shoe or other article by a continuous thread or cord, in such manner that each button will be independently attached, so that if the cord should break or be severed between the buttons the attachment would not be affected.

The invention is intended to provide means for carrying into effect the improved method of attaching buttons described in my application for letters patent of the United States filed March 18, 1882, serial No. 55723, said method consisting essentially in drawing a primary loop of thread through the material to which the button is to be attached, and also through the eye of the button, then drawing a secondary loop through the material and through the primary loop outside of the eye of the button, tightening the primary loop, and finally passing the secondary loop over the button and tightening said loop, thereby interlocking both loops and forming a square knot, one loop or bight of which passes through and the other around the eye of the button.

Of the accompanying drawings, forming a part of this specification, figure 1 represents a perspective view of a portion of a machine embodying my invention. Figs. 2, 3, 4, 5, and 6 represent similar views, illustrating different stages of the operation. Figs. 7, 8, 9, 10, 11, and 12 represent the position of the button and the loops securing it at different stages of the operation. Fig. 13 represents a side view of the loop-spreaders before they separate to spread and lower the loop. Fig. 14 represents a front view of the same. Fig. 15 represents a front view of the spreaders depressed and separated. Fig. 15^a represents a back view of the same. Fig. 16 represents a section on line $x\ x$, Fig. 15. Fig. 16^a represents a side view of the loop-spreaders in position shown in Figs. 15 and 16. Fig. 17 represents a perspective view of the wedge which separates the spreaders. Fig. 18 represents a side elevation of the entire machine. Fig. 19 represents a section on line $z\ z$, Fig. 18. Fig. 20 represents an elevation of the opposite side of the machine. Fig 20^a represents a rear view of a portion of the machine, showing the lower portion of the raceway, supporting standard and its guides. Fig. 21 represents a section on line $y\ y$, Fig. 20. Fig. 22 represents a bottom view. Fig. 23 represents a section on line $x'\ x'$, Fig. 22, and a side elevation of the arm of the machine with its side and parts of its mechanism removed. Fig. 24 represents a section on line $y'\ y'$, Fig. 22, and a side elevation of the arm of the machine with its side removed. Figs. 24^a, 24^b, 24^c, 24^d, and 24^e represent details. Fig. 25, sheet 4, represents a section on line $z'\ z'$, Fig. 22.

The same letters of reference indicate the same parts in all the figures.

In carrying out my invention, I provide a suitable supporting-frame, A, having a narrow elongated work-supporting arm, B, preferably horizontal, and of such size as to enable the upper of a boot or shoe to be drawn upon it, and allow said upper a free movement

laterally of the arm. Said arm B is hollow and contains a vibratory thread-carrier, C, and suitable tension devices.

Above the thread-carrier is a needle-plate, D, forming a part of the upper surface of the arm, and provided with a slot, s^3, extending longitudinally of the arm, to permit the needle, hereinafter described, to pass downwardly through the needle-plate, and move longitudinally of the arm to feed the material while depressed.

E represents the neck or arm, supporting the needle, presser, and cast-off bars, and located over the work-supporting arm B.

The needle-bar F and cast-off bar G are directly supported in a carrier, H, which is provided with ribs I′ I′, adapted to reciprocate horizontally in guides or ways I I (see Figs. 24 and 24ª) in the neck E. The carrier H is provided with a substantially-horizontal
202 arm, V, to the outer end of which is pivoted a lever, W, said lever being pivoted at *a* to the neck E, and provided with a roller, *b*, at its lower end, which bears upon the periphery of a disk, *c*, on the driving-shaft R, said disk having two projecting cams, *e f*. The lever W is held in yielding contact with the periphery of the disk *c* and its cams by a spring, *g*, and is oscillated by said cams and spring, thereby reciprocating the carrier H horizontally, the latter being moved inwardly from the outer end of the neck E by each cam, and outwardly by the spring. The cam *f* is shorter and has less outward projection than the cam *e*, and therefore gives the carrier H an inward movement, which is of less extent and shorter duration than that imparted by the cam *e*. The movements imparted respectively by the cams *f* and *e* to the carrier H produce what are hereinafter termed "primary" and "secondary" lateral or feed movements of the needle while the latter is in the material.

The needle-bar F is provided with a stud or pin, O, which projects through a vertical slot, P, in the carrier H and enters an orifice, N, in a slide, M, which is fitted in a slot, L, in an oscillating lever, J. Said lever is pivoted at K to the neck, and is oscillated vertically by means of a cam-grove, P′, in a disk, Q, on the driving-shaft R, and a connected rod, S, having a stud or roller, T, entering said cam-groove. The connecting-rod S has a slot, U, through which the shaft R passes. The needle-bar F is thus reciprocated vertically, the slide M in the lever J enabling said bar to be reciprocated vertically while at any point to which it is moved laterally.

The cast-off bar G is provided with two projections, *h h*, between which is a stud, *i*, attached to the needle-bar, said stud having a considerable independent movement between the projections *h h*, so that as the needle-bar rises and falls the stud *i* moves the cast-off bar to a limited extent in the same directions, the movements thus imparted causing the cast-off to be operated in the usual manner in casting off the primary loop, as hereinafter described; but, as it is necessary to give the cast-off an independent downward movement while the needle is depressed and moving laterally during the secondary feed movement, before alluded to, I provide at the top of the neck E a bell-crank lever, a^3, pivoted to an arm on the neck, and so located that when the needle-bar is making its secondary or

longer feed movement the upper end of said bar will strike a projection, a^5, on one arm of the lever a^3, as shown in Fig. 24^a, and turn said lever on its pivot, thereby pressing its other arm, which has a projection, a^7, downwardly on a pin or stud, a^6, on the cast-off bar, and depressing the latter, as shown in Fig. 24^b, just before the needle-bar rises at the completion of the outward or feed movement.

The presser-bar j is provided with an elongated presser-foot, k, composed of two arms, 2 3, connected by a block or enlargement, u^3, to which the presser-bar is attached, and separated by a slot, l, extending longitudinally of the work-supporting arm and coinciding with the slot s^3 in the needle-plate D. The sides of the slot l are formed to support the head of the button x, of the kind shown, in an upright position with its edge or shank projecting downwardly into said slot, so that when the secondary loop is pulled in, as hereinafter described, it will necessarily inclose the shank of the button.

The work-holding arms or branches 2 3 are curved upwardly at their rear ends, and the curved portions are separated from each other by a much wider space than the slot l, so that the attached button can pass freely back from the presser-foot, either in the direction of the length of the work-supporting arm or diagonally. This arrangement enables a shoe-upper, to which the buttons are attached in a curved row, to be freely fed along without obstruction of the attached buttons by the presser-foot, said buttons moving diagonally back from the presser-foot. The presser-bar is raised to permit the work to be fed by the lateral movements of the needle by a bell-crank lever, m, pivoted at n to the neck E, and connected by a rod, o, to a lever, p, which is pivoted at a, and has a roller, r, bearing on the periphery of the disk Q on the shaft R, said disk having the cam-grove p' in its side.

The disk Q has two cam-projections, t t, which act alternately on the roller r, and swing the lever p in the direction required to raise the presser-bar. A spring, u, on the outside of the neck E, bearing on a stud, v, projecting from the presser-bar, presses downwardly on said bar and the presser-foot, and forces the latter down upon the work when the cam t ceases to act on the lever p.

A hand-lever, u^4, is pivoted to the outer surface of the neck E, to enable the operator to raise the presser-foot independently. The presser-foot is provided at its upper end with an enlargement, u^3, having ears a' a', in which is journaled a rod or arbor, b', having between the ears a' a' an enlargement or collar, c', rigidly secured to said rod or arbor.

d' d' represent arms pivoted at e' e' to the collar c', and adapted to swing on their pivots toward and from each other. These arms, which I term "loop-spreaders," are provided at their swinging ends with hooks f' f', and on their front sides with spring-fingers g' g', said hooks and fingers co-operating in grasping a loop of thread, as hereinafter described.

h' represents an arm journaled on the rod b', so as to turn independently thereon, and provided with a curved wedge, i', adapted to be inserted between the spreaders d' and separate the same, as shown in Figs. 1, 3, 15, and 16. The collar c' is cut away or slotted centrally

to receive the arm h', and the slot terminates at one side of said arm in a shoulder, k', adapted to bear against a corresponding shoulder, j', formed on the arm.

203 The rod b' is provided with an arm, l', connected by means of an adjustable trunnion, m', with an adjustable socketed ear, n', on a rod, o', which extends backwardly and is pivoted to a lever, p', the latter being pivoted at q' to the frame A, and provided with a roller, r', entering a cam-groove, s', in a disk, t', on the driving-shaft.

The rod b' is oscillated by means of the cam-groove s' and the intermediate devices, the cam-groove being formed, as shown, to give the rod the following movements, viz: The spreaders being directly under the collar to which they are pivoted, as shown in Figs. 1, 3, 15, and 16, and being held apart from each other by the wedge i', the spreaders are next moved forward, leaving the wedge, which is held in the position shown by a spring, u', which holds a leather buffer, v', on the arm h' against the bottom of the enlargement u^3 of the presser-bar. Each spreader is provided with a spring, a^2, which is secured at one end to the block c' and at the other end to the spreader, as shown in Fig. 15^a, and presses the spreader inwardly, so that as the spreaders pass forward beyond the wedge and upward they close inwardly, as shown in Figs. 13 and 14. Before the spreaders complete their forward movement the shoulder k' on the collar c' comes in contact with the shoulder j' on the wedge-arm h', and causes the wedge to move forward with the spreaders, the latter remaining closed, however, in advance of the wedge. When the wedge is thus moved forward a spring-dog, b^2, pivoted to an extension of the enlargement of the presser-foot, engages automatically with a tooth, c^2, on the rear portion of the wedge, as shown in Fig. 13, and locks the wedge in the position shown, so that it is ready to separate the spreaders on their return or downward movement. The spreaders having entered a loop of thread, as hereinafter described, are next moved backwardly and downwardly, and during said movement are separated by the wedge, as shown in Figs. 1, 2, 15, and 16. When the spreaders have nearly completed their downward movement an arm, d^2, attached to the collar c', strikes a lateral projection on the dog b^2, as shown in Fig. 16^a, and disengages the dog from the tooth of the wedge, the latter, under the influence of the spring u', resuming its original position. (Shown in Figs. 16 and 16^a.)

The time of the described movements of the spreaders with relation to the movements of the needle is more particularly described in the general operation of the machine.

f^2 represents the button-reservoir, and g^2 the inclined raceway leading therefrom. The raceway is curved inwardly at its lower end, and is given a quarter-twist, so as to present the eyes of the buttons sidewise to the needle, as shown in Fig. 1. The raceway is formed to permit the buttons to be drawn from its end, instead of being drawn out laterally, as in my patent No. 252,117, dated January 10, 1882. The lower end of the raceway is provided with a yielding spring, w, which projects partly across the raceway, and bears against the lower buttons, and constitutes a yielding stop,

holding each button therein in succession until said button is withdrawn from the raceway, as described hereinafter. The raceway is supported with the reservoir on a post composed of two sections, h^2 and i^2. The lower end of the section h^2, to which the reservoir and raceway are directly attached, is journaled on the section i^2, which is adapted to slide horizontally in guides j^2 on the frame A. The raceway is therefore adapted to oscillate laterally of the work-supporting arm and to reciprocate longitudinally thereof. The pivoted section h^2 is provided with an arm, j^3, having a screw, k^2, on its outer end bearing against the side of the neck E. The neck is provided with an inclined or diagonal surface, l^2, over which the screw k^2 passes when the raceway is moved longitudinally. A spring, m^2, extending from a stud on the section h^2 to a stud on the section i^2, draws the raceway inwardly toward the neck E. When the raceway is moving backwardly from the outer end of the work-supporting arm its screw k^2, in passing over the diagonal surface l^2, is forced outwardly, thereby swinging the raceway outwardly. The swinging and longitudinal movements of the raceway cause the delivering or lower end of the raceway to move diagonally from the position it occupies when presenting a button to the needle, as shown in Fig. 1, to the position it occupies after the button has been withdrawn from the raceway, as shown in Figs 4 and 5. The sectional post h^2 i^2 is reciprocated in its guides by means of a lever, o^2, pivoted at p^2 to the frame A, engaged at its lower end by a roller with a cam-groove, r^2, in a disk, s^2, on the driving-shaft, and at its upper end with a block, t^2, pivoted to the section i^2, the upper end of the lever being bifurcated to embrace the block t^2.

The thread-carrier, which operates in the usual manner, is supported in a vertical rock-shaft, u^2, having an arm, v^2, which is connected by a rod, w^2, with a lever, x^2, which is pivoted at y^2 to the frame A, and has a roller engaged with a cam-groove, z^2, in the disk c on the driving shaft, said devices oscillating the carrier and causing it to alternately hold the thread away from and press it against the hook side of the needle.

Operation: The button-raceway being in position, as shown in Fig. 1, the eye of the lower button, x, is held under the needle. The needle descends through the eye of the button, the material, and the needle-plate. The needle then makes its shorter or primary feed movement while down. At the same time the thread-guide swings around to press the thread against the hook side of the needle. The needle is then raised and draws a primary loop, C′, through the eye of the button, as shown in Fig. 3. Then the needle
204 is moved back to its first position, passes down through the first loop, as seen in Fig. 4, outside the eye of the button, through the material and the needle-plate. While the hook of the needle is perforating the material the raceway is moved backwardly and the loop C′ is then caused to pull the last button past the yielding spring w and out of the raceway, as shown in Fig. 4. The needle then makes its longer or secondary feed movement, and the thread-guide again moves to press the thread against the hook of the needle. While the needle is making its secondary feed movement the cast-

off is moved down to the material by the arm a^3 and casts off the loop C′. The needle rises, and as it rises draws up a secondary loop, D′, through the first loop, as shown in Fig. 5. The operation of drawing the secondary loop entirely up tightens the primary loop, as shown in Figs. 6 and 9. The needle then drops enough to free the hook from the cast-off, so as to release the loop from the hook of the needle. The spreaders swing toward the needle at the same time, and the hooks of the spreaders, which are now close together, enter the loop as soon as the loop is released from the hook of the needle. The forward swinging movement of the spreaders after the hooks enter the loop is sufficient to deflect or bend the loop away from the needle. The spreaders then commence to recede from the needle, and at the same time are separated at their hooked ends, thus spreading the loop into a triangular form, and carrying it over the head of the button, as shown in Figs. 1 and 10. The springs g' serve to hold the loop upon the hooks during their receding and separating movements. While the loop D′ is being opened and carried over the head of the button the needle is moved to its original position, and at the same time the raceway returns to its original position, so as to present its lower button to the needle. The needle then descends through the eye of the lower button in the raceway, engages with the thread, which is again presented to it by the thread-carrier, and draws up another primary loop through the eye of said lower button. The operation of drawing up the last-named loop draws in the secondary loop previously drawn over the preceding button, drawing said loop inwardly and interlocking it with the primary loop of said button, thus forming the square knot which secures the button to the material, as shown in Fig. 11. The above-described steps are taken in the attachment of each button.

c^3 represents a bent arm, which is pivoted to the extension of the upper part of the presser-foot, and is held by a spring, d^3, against an adjustable stud, e^3, on the rod o'. One end of said arm c^3 projects in front of the spreaders, and is raised and lowered by the action of the rod o' and spring d^3. The arm c^3 is brought down upon the secondary loop while said loop is in the position shown in Fig. 1, and prevents the loop from rising and failing to be drawn under the button when it is tightened by the operation of drawing up the succeeding primary loop, as above described, in case the springs g' g' release the loop before it is tightened or if from any cause the loop has a tendency to rise above the button it is intended to aid in securing.

I do not limit myself to the employment of the arm a^3, however, as it is only intended as an auxiliary device to guard against the accidental loosening of the loop.

I do not limit myself to the particular devices shown for forming the knot which attaches the buttons, as said devices may be variously modified without departing from the spirit of my invention.

The cams e f, which impart the primary and secondary feed-movements to the needle, are made adjustable as to their projection from the periphery of the disk c, to which they are attached, so that the length of said feed-movements or either of them can be varied as

may be desired. To this end each of said cams is attached to the disk *c* by screws s^4 s^4, the heads of which are countersunk in the outer surfaces of the cams and screws s^5 s^5, whose heads are provided with flanges countersunk in the inner surfaces of said cams, as shown in Fig. 24. The screws s^4 hold the cams to the disk, and the screws s^5 regulate the approach of the cams to their seats on the disk, the cams being movable toward and from the disk.

I claim—

1. In a machine for attaching buttons, the combination of button-feeding mechanism, and mechanism for first drawing a primary loop of thread through the material and the eye of a button; secondly, drawing a secondary loop through the material and through the primary loop outside of the eye of the button; thirdly, throwing the secondary loop over the head of the button and finally forming said loops into a square-knot, as set forth.

2. In a machine for attaching buttons, the combination of loop-forming mechanism, button-feeding mechanism whereby a button is presented to the needle of the loop-forming mechanism, means for imparting to said needle the primary and secondary feed-movements described, whereby first the primary and secondary loops are drawn respectively through and outside of the eye of the button, and secondly, the material with the partially-attached button is advanced, and devices for spreading and depressing the secondary loop after the material is advanced, to cause said loop to inclose the button and hold it until tightened by the subsequent action of the loop-forming mechanism, as set forth.

3. In a machine for attaching buttons, the combination of button-feeding mechanism, a longitudinally-slotted presser-foot, a loop-forming mechanism, means for imparting to the needle and cast-off of the loop-forming mechanism the primary and secondary lateral movements described, means, substantially as described, for vertically reciprocating the cast-off at different points in its lateral movements, and loop-spreading devices, all arranged and operated substantially as described.

4. The presser-foot composed of two connected arms separated by a longitudinal slot, the sides of which are adapted to support a button and having an enlarged rear opening to permit the passage of an attached button, as set forth.

5. The combination, with the button-feeding and loop-forming mechanism, of the loop-spreaders and mechanism for inserting said spreaders into the secondary loop and depressing and separating them to depress and spread said loop, as set forth.

6. The combination of the rod b', having an enlargement or collar, mechanism for oscillating the same, the spreaders pivoted to said collar and pressed inwardly by springs, the wedge i', journaled on the rod, and drawn backwardly by a spring, u', the shoulders j' k', arranged as described, whereby the spreaders are moved forward and in advance of the wedge, and the latter is subsequently moved with the spreaders, a dog, b^2, to lock the wedge, and an arm, d^2, to disengage the dog from the wedge when the spreaders move backwardly, as set forth.

7. The combination, with the loop-spreaders, of the auxiliary loop-holding arm and mechanism for raising and lowering the same, as set forth.

8. The raceway pivoted to a longitudinally-movable support, i^2, combined with means for oscillating the raceway and moving it longitudinally, as set forth.

9. The combination of the raceway, the section h^2, supporting the raceway, the longitudinally-movable section i^2, having a pivotal connection with the section h^2, mechanism, substantially as described, for reciprocating the section i^2 and the parts supported thereby, and the fixed incline l^2, the arm or device k^2 on the section h^2, bearing against said incline, and the spring m^2, whereby the raceway is oscillated when moved longitudinally, as set forth.

10. The combination, with the needle and cast-off bars, of the carrier H, guiding said bars and horizontally movable in fixed guides, means for giving said carrier first a short and then a longer reciprocating movement, mechanism, substantially as described, for reciprocating the needle-bar vertically, devices on the needle and cost-off bars causing the operation of the latter by the vertical movements of the needle-bar, and an independent device operated by the longer lateral movement of the needle-bar to depress the cast-off bar, as set forth.

11. The combination of the carrier H, reciprocated horizontally, as described, the needle and cast-off bars guided and moved laterally by the carrier, the oscillating lever J, having a slot, L, a slide, M, in said slot engaged with a stud on the needle-bar, the projections h h on the cast-off bar, and the interposed stud on the needle-bar, whereby the cast-off is operated during the vertical movements of the needle-bar, and the lever a^3, pivoted to a fixed support and operated by the longer lateral movement of the needle-bar, to depress the cast-off, as set forth.

12. The raceway formed to permit the removal of the buttons from its end and adapted to be moved longitudinally and laterally, as described, combined with the spring w, projecting partly across the end of the raceway and adapted to hold the lower button with a yielding pressure, as set forth.

13. The combination, with the loop-forming mechanism, of the movable raceway adapted to present the eye of the last button it contains to the needle, and to hold the button while a loop is being drawn through the eye thereof by the needle, and mechanism for moving the raceway backwardly while the said loop is held by the needle, thereby withdrawing the button from the raceway, as set forth.

14. In a machine for securing buttons, the combination, with the loop-forming and feeding mechanism, of the narrow elongated work-supporting arm adapted to permit the free lateral and longitudinal movement of a boot or shoe upper, and the presser-foot having a slot adapted to support a button while it is being attached, and an enlarged rear opening to permit the passage of the attached buttons, as set forth.

15. The combination, with the laterally-movable needle, of the

cams *e f*, and intermediate devices for moving the needle laterally, said cams being adjustable so as to regulate the feed movements of the needle, as set forth.

In testimony whereof I have signed my name to this specification, in the presence of two subscribing witnesses, this 29th day of July, 1882.

JOSEPH MATHISON.

Witnesses:
C. F. BROWN.
A. L. WHITE.

206 The following is the opinion of the circuit court, in accordance with which the decree was entered dismissing the bill of complaint in this cause:

Opinion of the Court. (*Filed March* 5, 1885.)

Circuit Court of the United States, District of Massachusetts. In Equity.

MORLEY SEWING MACHINE COMPANY *et al.*
v.
CHARLES B. LANCASTER. } No. 1793.

COLT, *J.*:

The present case arises upon an alleged infringement of letters patent to James H. Morley, dated January 4, 1881, for improvements in button-sewing machines. The invention relates to the automatic mechanical sewing of buttons to a fabric, and, on the evidence before us, we think Morley may fairly lay claim to have invented the first practical machine for accomplishing this result.

In view of the position taken by the learned counsel for complainants, based on the claim that Morley was a pioneer in the art and his invention a primary one, it is necessary to clearly understand at the outset the legal scope of the Morley patent. For if, on the ground of primary invention, the patent covers every other automatic button-sewing machine, or every other button-sewing machine which makes use of the three groups of mechanism employed by Morley, no matter how radical the changes in the specific mechanism of those groups may be, then it is clear that the defendant's machine infringes, and we need go no further.

207 In his patent, after describing the machine, Morley declares that the same is only one of different mechanisms he has contemplated, which may be effectually employed for carrying out the main feature of his invention—the automatic mechanical sewing of buttons to a fabric. But it is manifest that Morley cannot patent the principle of sewing buttons to a fabric automatically any more than the idea of nailing boxes by machinery, when previously nails had been driven singly and by hand, could be patented. He could only patent the particular contrivance to make the idea practically useful, as the Supreme Court held in the nail case. Wicke *v.* Ostrum, 103 U. S., 461.

Nor do we see how the patent can be held to extend to every button-sewing machine which uses the three groups of instrumentalities employed by Morley, for this is to say that the Morley patent is in no way limited to the specific mechanism described in the specification, but embraces every form of mechanism which these several elements might assume. It is difficult to conceive of a button-sewing machine that is not made up of similar groups of mechanism. To attach a button to a fabric by machinery it would seem necessary to employ some form of button-feeding mechanism, sewing mechanism, and mechanism for feeding the fabric along.

To hold, broadly, that the Morley machine covers every other button-sewing machine which adopts the use of these three groups of instrumentalities in combination, without regard to the specific mechanism employed, is to hold in substance that it covers all automatic button-sewing machines. It would in effect be another way of securing to Morley a monopoly of the principle of sewing buttons to a fabric by machinery. Morley's patent secures him the exclusive right to the use of the mechanism described therein. It does not give him the exclusive right to a principle, or to groups
208 of instrumentalities independent of the mechanism employed.

The most the complainants can ask for, in view of the fact that the Morley invention is a primary one, is that the court should adopt a more liberal rule of construction than is usual in the case of secondary inventions, and thus recognize a principle first clearly laid down in McCormick *v.* Talcott, 20 How., 402.

When an invention is simply an improvement on a known machine by a mere change of form or combination of parts the inventor is only entitled to the specific form of device which he produces, and he cannot invoke the doctrine of equivalents to suppress other improvements which are not colorable invasions of his own; but where an inventor precedes all the rest, and his machine performs a function never performed by any earlier machine, the court will treat as infringers all who accomplish the same result by substantially the same or substantially equivalent means. In the one class of inventions slight differences may avoid infringement. In the other class there must be substantial differences to escape such a charge.

The counsel for the complainants strenuously contend for the application of a broader rule of construction, in the case of a primary patent, than is here indicated. They maintain that the defendant, by adopting the three groups of instrumentalities which Morley uses, infringes, whether the specific mechanism of the two machines is substantially equivalent or not. We know of no case of a machine patent, primary or otherwise, which goes to this length. We do not think the cases cited by the complainants establish any broader rule than we have stated.

In McCormick *v.* Talcott, 20 How., 403, it was held that the patentee, being the original inventor of the device or machine
209 called the divider, he would have a right to treat as infringers all who make dividers operating on the same principle and performing the same functions by analogous means or equivalent

combinations. In Railway Co. *v.* Sayles, 97 U. S., 554, the court held that the defendant did not infringe, because the patentee was only entitled to the specific form of car-brake which he produced. This was on the ground that the patentee had merely made an improvement in what was old; but in the course of the opinion the court say that if one inventor precedes all the rest and strikes out something which includes and underlies all that they produce he acquires a monopoly and subjects them to tribute.

In Clough *v.* Barker, 106 U. S., 166, it was decided that, as Clough was the first person who applied a valve regulator to a burner, he was entitled, under the decisions heretofore made by the court, to hold as infringements all valve regulators which perform the same office in substantially the same way and were known equivalents for his form of valve regulator. And in the two cases of the Consolidated Safety Valve Co. *v.* Crosby Steam Gauge and Valve Co., just decided by the supreme court, and not yet reported, the court hold that the defendant's safety-valve is substantially equivalent in construction and mode of operation to that described in the Richardson patents, on which suit was brought.

The complainants' citation of authorities on the construction of process patents are hardly in point, because if one uses the process described in the patent he may infringe though he employs a different apparatus. Tilghman *v.* Proctor, 102 U. S., 707.

In American Bell Telephone Co. *v.* Dolbear, 15 Fed. Rep., 448, it was held that the Bell patent embraced a process and was not limited to any form of apparatus; and Justice Gray said that, as
210 the defendant used Bell's process or method, it was not necessary to consider whether the defendant's apparatus was a substantial equivalent of the plaintiff's.

As a result of the foregoing inquiry it becomes necessary in the consideration of this case to compare the mechanism of the Morley machine with that used in the defendant's machine to ascertain whether or not they are substantially equivalent.

It has been observed that both machines embrace three main groups of instrumentalities—mechanism for feeding the buttons to the machine, sewing mechanism for receiving and taking possession of the buttons in succession and securing them to the fabric, and mechanism for feeding the fabric along and thereby spacing the buttons at the required distance from each other.

The button-feeding mechanism in the Morley machine consists, in substance, of a hopper for receiving the buttons. In this hopper there is a hopper valve, which picks out the buttons one by one and delivers them into an inclined trough. The buttons enter this trough with their shanks turned in different directions. A corrugated strip of metal lying over the top of the trough, which is oscillated by proper machinery, rolls the buttons over so that their shanks or eyes lie in the slot or groove at the bottom of the trough.

The buttons slide down the trough. At the lower end of the trough there is a button wheel provided with pockets, each capable of holding a button. The button wheel rests on a stationary table, and when a button arrives over a notch in the table a plunger or

punch descends into the pocket and drives the button into what is termed a split-spring spoon. The spoon turns round on its axis ninety degrees in order to bring the eye of the button into a horizontal position, so that it can be entered by the needle. The patent also describes a modified form of contrivance for bringing the buttons successfully into position to permit the needle to pass
211 through the eye of the button. In this modification the button wheel is dispensed with and a spring applied to the bottom of the trough, which holds the column of buttons in place. This spring, or spring gate, is opened at intervals and shuts itself. Spring nippers are used to transfer the buttons from the trough to the sewing mechanism. These spring nippers open the gate at the bottom of the trough, receive and clamp the button, and turn it over ninety degrees, so that the shank may be in a horizontal position to be entered by the needle.

In the defendant's machine the buttons are thrown into a hopper provided with a reciprocating brush, which forces the buttons into slits, with their bodies down and shanks up. These slits converge into a single slit. Just before reaching the end of the raceway the slit is twisted, so that the shanks of the buttons are presented in a horizontal position at the end of the raceway, ready for the needle to enter. The column of buttons is held up by a spring, or spring gate, and this spring gate is opened by the button itself, owing to the vibratory motion of the raceway. The thread passing through the eye of the lowest button it is prevented from vibrating, but the button is pulled out, and in pulling out overcomes the resistance of the spring.

It thus appears that the defendant's machine has no hopper valve and no corrugated plate for turning the buttons over in the trough; but, more important than this, it has no button wheel, or table, or punch, or split-spring spoon, or spring nippers, or any equivalents therefor. By presenting the buttons shank upwards in the raceway or trough and then twisting the slit in the raceway which holds the shanks the Lancaster machine dispenses with all the mechanism in the Morley patent for bringing the buttons from the end of the trough to a position to be operated upon by the needle.

We think an inspection and comparison of the button-
212 feeding mechanisms of the two machines show them to be essentially different.

As to the sewing mechanism of the two machines, we deem it unnecessary to enter into details. It is admitted by the complainants' expert, as it is apparent on inspection of the machines, that the stitching or sewing mechanism of the Lancaster machine is different from that shown or described in the Morley patent, and that the form of stitch is different. Unless, therefore, the Morley patent covers all forms of sewing mechanism or all forms in combination with button-feeding and cloth-feeding devices, there can be no infringement.

The mechanism for feeding the fabric along and spacing the buttons is substantially the same in both machines. We do not under-

stand that Morley claims that he invented this feed mechanism or that it is new.

The complainants charge the defendant with infringement of the 1st, 2d, 8th, and 13th claims of the Morley patent, which are as follows:

1. The combination, in a machine for sewing shank buttons to fabrics, of button-feeding mechanism, appliances for passing a thread through the eye of the buttons and locking the loop to the fabric, and feeding mechanism, substantially as set forth.

2. The combination, in a machine for sewing shank buttons to fabrics, of a needle and operating mechanism, appliances for bringing the buttons successively to positions to permit the needle to pass through the eye of each button, and means for locking the loop of thread carried by the needle to secure the button to the fabric, substantially as set forth.

8. The combination, in a machine for sewing buttons to fabrics, of button feeding and sewing appliances, substantially as set forth, and feeding appliances and operating mechanism, whereby the feeding devices are moved alternately different distances to alternate short button stitches, with long stitches between the buttons, as specified.

213 13. The combination, with button-sewing appliances, of a trough, appliance for carrying the buttons successively from the trough to the sewing devices, and mechanism for operating said appliances and sewing devices, as set forth.

Holding that the Morley patent under the law is limited substantially to the mechanism set out and described therein, and having found that the button-feeding mechanism and the sewing mechanism of the Lancaster machine are not substantially the same, or substantially the equivalent of those in the Morley machine, it is clear that the defendant does not infringe any of the above claims. It follows that the bill must be dismissed, and it is so ordered.

Bill dismissed.

214 *Prayer for Reversal and Assignment of Errors.* (*Filed March* 5, 1885.)

Circuit Court of the United States, District of Massachusetts. In Equity.

MORLEY SEWING MACHINE CO. *et al.*
v.
CHARLES B. LANCASTER. } No. 1793.

To the honorable the justices of the Supreme Court of the United States:

Respectfully show to your honors the appellants, who are the complainants in the above-entitled cause, that they filed their bill of complaint in said circuit court on November 6, 1882, wherein they averred that the respondent had infringed upon the rights of

the complainants under letters patent of the United States granted to James H. Morley, dated January 4, 1881, numbered 236,350, the property of the complainants.

The respondent filed his answer to said bill on January 4, 1883, and issue was duly joined thereon by the complainants' replication, filed on February 16, 1883.

The cause came on to be heard at this term of said circuit court upon the pleadings and proofs, and was argued by counsel for the respective parties; and, upon consideration thereof, a final decree was entered by said circuit court ordering the complainants' bill to be dismissed.

The appellants, being aggrieved, now in open court appeal
215 from the whole of said decree of the circuit court of the United States and respectfully pray that the decree of said circuit court and the bill, answer, pleadings, depositions, evidence, and proceedings in said cause may be sent to the Supreme Court of the United States without delay, and that the said Supreme Court will proceed to hear the said cause anew, and that the said decree of the circuit court, and every part thereof, may be reversed, and such other decree made as to said Supreme Court shall seem just.

And these appellants assign for error in said judgment and decree of the circuit court that the circuit court ought to have held and adjudged that the defendant infringed upon said letters patent, and particularly upon the first, second, eighth, and thirteenth claims of said patent, and that in the construction of said patent the said court should have held not only that Morley was the first person who invented a practical machine for sewing buttons on fabrics, but that the patent for his invention contained broadly the combination of the following sets of instrumentalities:

1. Mechanism for feeding the buttons to the machine.
2. Sewing mechanism for receiving and taking possession of the buttons in succession and securing them to the fabric.
3. Mechanism for feeding the fabric or leather along, and thereby spacing the buttons at any required distance from each other; and that the court erred in not holding that the defendant, in the machinery used by him, employed the same combination of instrumentalities to perform the same result by substantially the same means.

By their solicitor, AMBROSE EASTMAN.

216 UNITED STATES OF AMERICA, } *ss:*
Massachusetts District, }

I, John G. Stetson, clerk of the circuit court of the United States for the first circuit and district of Massachusetts, certify that the foregoing is a true copy of the record of said circuit court in the cause in equity entitled Morley Sewing Machine Co. *et al. vs.* Charles B. Lancaster, lately determined in said circuit court, and of all proceedings therein, and of the opinion of the court, and of the prayer for reversal, and assignment of errors filed therein.

In testimony whereof I hereunto set my hand and affix the seal of said circuit court, at Boston, in said district, this first day of September, in the year of our Lord one thousand eight hundred and eighty-five, and of the Independence of the United States the one hundred and tenth.

[Seal of the Circuit Court, Massachusetts.]

JOHN G. STETSON, *Clerk.*

217 *Bond on Writ of Error.*

Know all men by these presents that we, The Morley Sewing Machine Company and The Morley Button-Sewing Machine Company, corporations duly organized under the laws of the State of Maine, as principals, and Charles A. Sinclair, of Portsmouth, New Hampshire, and James P. Cook, of Salem, Massachusetts, as sureties, are held and firmly bound unto Charles B. Lancaster, of Newton, in the Commonwealth of Massachusetts, in the full and just sum of five hundred dollars, to be paid to the said Charles B. Lancaster, his certain attorney, executors, administrators, or assigns; to which payment, well and truly to be made, we bind ourselves, our heirs, executors, and administrators, jointly and severally, by these presents.

Sealed with our seals and dated the thirtieth day of March, in the year of our Lord one thousand eight hundred and eighty-five.

Whereas lately, at a circuit court of the United States within and for the district of Massachusetts, in a suit in equity depending in said court between the said Morley Sewing Machine Company and the said Morley Button-Sewing Machine Company, complainants, and the said Charles B. Lancaster, defendant, judgment was rendered against the said complainants, and the said complainants having procured a writ of error, and filed a copy thereof in the clerk's office of the said court, to reverse the judgment in the aforesaid suit, and a citation directed to the said defendant, citing and admonishing him to be and appear at a Supreme Court of the United States to be holden at Washington on the second Monday of October next:

Now, the condition of the above obligation is such that if the said complainants shall prosecute their said writ of error to effect and answer all damages and costs if they fail to make their plea good, then the above obligation to be null and void; otherwise, to remain in full force and virtue.

MORLEY SEWING MACHINE COMPANY, [L. S.]
By CHAS. A. SINCLAIR, *Treasurer.*
MORLEY BUTTON-SEWING MACHINE COMPANY, [L. S.]
By CHAS. A. SINCLAIR, *Treasurer.*
CHAS. A. SINCLAIR. [L. S.]
JAMES P. COOK. [L. S.]

Signed, sealed, and delivered in the presence of—
AMBROSE EASTMAN, to all.

Approved:
LE BARON B. COLT,
U. S. Circuit Judge.

A true copy of the bond taken by the judge at the time of allowing the writ of error named in said bond, which bond is on file in the office of the clerk of the circuit court of the United States for the first circuit and district of Massachusetts.
Attest: JOHN G. STETSON,
Clerk U. S. C. C., Mass. Dist.

218 The United States of America to Charles B. Lancaster, of Newton, in the Commonwealth of Massachusetts, Greeting:

You are hereby cited and admonished to be and appear at a Supreme Court of the United States, to be holden at Washington on the second Monday of October next, pursuant to an appeal claimed and allowed by the circuit court of the United States for the district of Massachusetts, in a cause in equity lately determined in said circuit court, wherein The Morley Sewing Machine Company and The Morley Button-Sewing Machine Company, corporations duly organized under the laws of Maine, are complainants and appellants and you are defendant, to show cause, if any there be, why the decree rendered against the said complainant in said cause should not be reversed and why speedy justice should not be done to the parties in that behalf.

Witness the honorable Le Baron B. Colt, circuit judge of the United States for the first judicial circuit, this fourth day of May, in the year of our Lord one thousand eight hundred and eighty-five.

LE BARON B. COLT,
U. S. Circuit Judge, First Judicial Circuit.

219 [Endorsed:] 1793. Morley S. M. Co. *v.* Lancaster. Citation.

BOSTON, *May* 9, 1885.
The defendant acknowledges due service of the within citation.
GEO. E. SMITH,
Sol'r for Def't.

Endorsed on cover: Massachusetts C. C. U. S. No. 165. The Morley Sewing Machine Company and The Morley Button-Sewing Machine Company, appellants, *vs.* Charles B. Lancaster. Filed October 20, 1885.

Supreme Court of the United States.

OCTOBER TERM, 1888.

No. 165.

The Morley Sewing Machine Co., and the Morley Button Sewing Machine Co., Appellants,

vs.

Charles B. Lancaster.

Brief on behalf of the Appellants

—BY—

BENJAMIN F. THURSTON.

PROVIDENCE:
E. A. Johnson & Co., Law Printers, 57 Westminster Street.
1888.

Supreme Court of the United States.

THE MORLEY SEWING MACHINE CO., AND THE MORLEY BUTTON SEWING MACHINE CO., APPELLANTS,

vs.

CHARLES B. LANCASTER.

No. 165.

BRIEF ON BEHALF OF THE APPELLEE.

This is a bill in equity against the defendant, Charles B. Lancaster, to restrain, by injunction, the alleged infringement by him of Letters Patent for a machine for sewing buttons on fabrics, granted to James H. Morley, January 4, 1881, No. 236,350.

The legal title to the patent is vested in the Morley Sewing Machine Company, as appears by the assignments of record. The Morley Button Sewing Machine Company, joined as complainant, is the owner of the exclusive right to make use of the invention covered by said Letters Patent in sewing buttons on leather and other fabrics, as appears by the instrument of license in the record.

No question is made as to the corporate existence of the two companies, or as to the fact that one is the owner, generally, of the legal title to the patent, and the other the owner of the ex-

clusive right to make use of the invention as above stated. The defendant makes use of machinery for automatically sewing buttons on leather within the district of Massachusetts.

The Morley Automatic Button Sewing Machine.

The Letters Patent granted to James H. Morley, January 4, 1881, No. 236,350, will be found in the Record at pages 134—146.

Beyond any doubt or question the Morley machine was the first machine known to the mechanic arts for accomplishing the result of automatically separating shank buttons from a mass, conveying them in order to a position where they can be selected by the machine one after another, and by sewing mechanism, coupled with suitable cloth-feeding mechanism, be sewed to leather or fabric at prescribed suitable distances apart from each other. These functions of selecting buttons from a mass, sewing them one by one to a fabric, and spacing the distances between the buttons, are all performed automatically by the Morley machine.

The Morley machine successfully accomplished a feat in machinery which would seem to be, in advance of its execution, a mechanical impossibility. The problem was to select from an indiscriminate mass of shoe buttons which are furnished with spherical or semi-spherical heads, with wire eyes projecting from the heads, single buttons, and present them in succession to the needle of a sewing mechanism, so that the needle can pass through the small eye in the shank of the button and secure it to leather or other suitable fabric. Wood screws, horse nails, pins, etc., have before the Morley invention been selected one by one from a mass and delivered to other machinery, but in all such

instances the analogy of operation with the Morley machine is remote. Screws, horse nails, etc.. have a natural tendency, due to the greater gravity of their shanks as compared with their heads, to arrange themselves in conveyor ways shanks downward, and are supported by their heads on the top surface of such ways, down which they slide. The mechanism which takes the blanks one after another from such conveyor-ways is invariably some form of nipper jaws, which carry them to a place where they are to be taken possession of by machinery for cutting a thread on the shank, or for pointing the same, or for dressing the head.

When shoe buttons are to be dealt with by machinery, it is impossible to follow the order of operations which are found in previous screw, nail and pin machines, for the reason that the buttons will not arrange themselves naturally shanks downward, on account of their heads being many times heavier than their small wire shanks. Accordingly it was necessary to employ, in addition to the conveyor-ways known to the art, some means for turning each button into such a position that a plane passing through the eye of the button should be perpendicular to a plane passing through the longitudinal axis of the sewing needle, and so that upon the descent of the needle it should pass through the eye in the button shank.

An exhaustive examination into the prior art on the part of the defendants disclosed no prior machine as having an existence capable of accomplishing any such difficult and delicate operation. An attempt was indeed made on the part of an inventor to produce a machine that would accomplish these results, but it was a conspicuous failure and was relegated to the class of abandoned experiments.

The defendant's answer sets up various Letters Patent of prior date, as impairing the scope of the Morley invention, but no testi-

mony whatever has been taken by the defendant in support of such allegation; and Mr. H. B. Renwick, the defendant's expert witness, has not even dignified any one of them with a reference On the other hand, the complainants' expert in his testimony (Rec. pp. 123-126), has, out of abundant caution, considered all of said prior patents, and pointed out their incapacity to meet any part of the invention covered by the Morley patent.

The Morley patent covers broadly the combination of the following sets of instrumentalities:

1. Mechanism for feeding the buttons to the machine.
2. Sewing mechanism for receiving and taking possession of the buttons in succession and securing them to the fabric.
3. Mechanism for feeding the fabric or leather along, and thereby spacing the buttons at any required distance from each other.

The defendant's expert, states the matter correctly when he declares (p. 30, Ans. to Q. 6) that:—

> "Both machines" (complainants' and defendant's) "contain three main groups of instrumentalities, which, when combined together make up the machine.
>
> "These are: First, mechanism for holding the buttons in mass and delivering them separately in proper position over the leather to be attached thereto by the sewing and stitching mechanism.
>
> "Second, the stitching mechanism; and third, the mechanism for feeding the leather along so as to space the stitches, and consequently the buttons when sewed on."

The defendant clearly makes use, as appears by the above quoted recognition of the fact, of the same combination of groups of instrumentalities, viz.—mechanism for selecting the buttons one by one from a mass and conveying them to a point where the needle of the sewing machine is to take them, and arranging them so that the needle will pass through the eye of the button shank; sewing mechanism for fastening the button to the fabric;

and mechanism for feeding the fabric along so as to space the position of the buttons.

An examination of the record will disclose that the defense relied upon was that there were certain specific differences between the feeding mechanism in the two machines, and also specific differences between the sewing mechanisms of the two machines; and it was claimed that thereby the defendant had not employed the invention covered by the claims of the Morley patent in suit.

The court below adopted this view of the case, and held that the defendant's machine was not an infringement, for this reason, of the Morley patent. From the decree dismissing the bill an appeal was duly taken, and the errors were duly assigned in the prayer for reversal. (Rec. p. 160).

Assignment of Errors.

The errors assigned are, that the Circuit Court ought to have held and adjudged that the defendant infringed upon said Letters Patent, and particularly upon the 1st, 2d, 8th and 13th claims of said patent, and that in the construction of said patent the said court should have held, not only that Morley was the first person who invented a practical machine for sewing buttons on fabrics, but that the patent for his invention contained broadly the combination of the following sets of instrumentalities:

1. Mechanism for feeding the buttons to the machine;
2. Sewing mechanism for receiving and taking possession of the buttons in succession and securing them to the fabric;
3. Mechanism for feeding the fabric or leather along, and thereby spacing the buttons at any required distance from each

other; and that the court erred in not holding that the defendant, in the machinery used by him, employed the same combination of instrumentalities to perform the same result by substantially the same means

The Morley patent after describing the details of construction which make up the entire machine, composed of these three main groups of instrumentalities, proceeds to say:—

> "Having thus described the machine and constructions set forth in the drawings, I wish it to be understood that the same is only one of different mechanism which I have contemplated, and which may be effectually employed for carrying out the main feature of my invention, to wit, the automatic mechanical sewing of buttons to a fabric.
>
> "Thus different means may be adopted for carrying the thread through the eye of the button into the fabric, as, for instance, passing the hooked needle through said eye to a position to seize the thread from the straight needle or from a suitable carrier, and then draw the loop down through the fabric to be secured beneath by a shuttle or needle thread; or the eye-pointed needle may be used in connection with a loop-spreader and shuttle for carrying a thread through the loop, a single thread or two threads being used. It will further be understood that wires may be sometimes substituted for threads, and that other feed mechanisms may be employed, the needles moving with but not controlling the fabric as in the construction described."

Mr. Henry A. Chapin, the complainants' expert, who also prepared the specification of the Morley invention, and who is familiar with its relations to any matter exhibited in the prior known art, agrees entirely with Mr. Renwick upon the subject of the combined constituents which make up the Morely organization. He says (Rec. 10. Ans. to Int. 3): —

> "I have examined the Letters Patent mentioned in the question, and understand the improvement of mechanism described therein to consist in the combination, with sewing devices, of mechanism for automatically feeding shank buttons to a position where they can be, one at a time, operated upon by a needle and thread to secure

them to a fabric, and of means for feeding the fabric along to properly space the buttons thereon."

The claims relied on by the complainants are the 1st, 2d, 8th, and 13th. They are as follows: —

"1. The combination in a machine for sewing shank buttons to fabrics, of button-feeding mechanism, appliances for passing a thread through the eye of the buttons and locking the loop to the fabric, and feeding mechanism, substantially as set forth.

"2. The combination in a machine for sewing shank buttons to fabrics, of a needle and operating mechanism, appliances for bringing the buttons successively to positions to permit the needle to pass through the eye of each button, and means for locking the loop of thread carried by the needle to secure the button to the fabric, substantially as set forth."

"8. The combination, in a machine for sewing buttons to fabrics, of button feeding and sewing appliances, substantially as set forth, and feeding appliances and operating mechanism whereby the feeding devices are moved alternately different distances to alternate short button stitches with long stitches between the buttons, as specified."

"13. The combination, with button-sewing appliances, of a trough, appliances for carrying the buttons successively from the trough to the sewing devices, and mechanism for operating said appliances and sewing devices, as set forth."

The remaining claims of the Morley patent relate to features of structural organization, and are subordinate in their scope to the claims which express the broad features of the machine, independent of mere peculiarities of construction of the members composing them. Such minor claims are not alleged to be infringed.

The record shows that Morley was the first person who succeeded in producing an automatic machine for sewing shoe buttons on fabrics. He is entitled, therefore, from the fact that he is a pioneer, and in fact the creator of this art, to a very liberal construction of the claims of his patent. If he were a mere improver upon prior machines capable of accomplishing the same

general result, his claims would justly receive a much narrower interpretation, and the rule as to what would constitute a substantial equivalent, in dealing with the machine of an alleged infringer, would be more strict.

The Doctrine of Equivalents in its Application to Letters Patent Which Stand at the Head of an Art, and are the Creators of such Art.

A *primary* invention has been correctly defined as one which performs a function never performed by any earlier invention. A *secondary* invention is one which performs a function previously performed by some earlier invention, but which performs that function in a substantially different way from any that preceded it. The rule as to what constitutes a substantial equivalent must necessarily be different when we are dealing with these two different classes of inventions. In the primary invention, where mechanical functions are performed by an organization, as a whole, entirely new and never accomplished in any prior machine, all subsequent machines, which employ substantially the same groups of instrumentalities to accomplish the same end, are infringements, although it may indeed be true that the subsequent machine has simplified the mechanical construction of one or more groups of mechanisms which make up the machine. The rule is stated in the case of *McCormick* vs. *Talcott*, 20 How, 405, and has never been changed in any subsequent decision of the Supreme Court, but, on the contrary, has been reaffirmed. In that case the Court say:

> "If he (the patentee) be the original inventor of the device or machine called the divider, he will have a right to treat as infringers all who make dividers operating on the same principles, and performing the same functions by analogous means or equivalent

> combinations, even though the infringing machine may be an improvement of the original, and patentable as such. But if the invention claimed be itself but an improvement on a known machine by a mere change of form or combination of parts, the patentee cannot treat another as an infringer who has improved the original machine by use of a different combination performing the same functions. The inventor of the first *improvement*" (as distinguished from the inventor of the original machine) "cannot invoke the doctrine of equivalents to suppress all other improvements which are not mere colorable invasions of the first."

This doctrine is reaffirmed in the case of *Railway Co.* vs. *Sayles*, 97, U. S., 556. Here the court said:—

> "In such cases, if one inventor precedes all the rest, and strikes out something which includes and underlies all that they produce, he acquires a monopoly, and subjects them to tribute. But if the advance towards the thing desired is gradual, and proceeds step by step, so that *no one can claim the complete whole*, then each is entitled only to the specific form of device which he produces, and every other inventor is entitled to his own specific form, so long as it differs from those of his competitors, does not include theirs. *These general principles are so obvious, that they need no argument or illustration to support them.*"

The case of *Clough* vs. *Barker*, 106 U. S., 167, is another illustration in point. The Circuit Court decided that the defendant's gas burner was not an infringement of the patent. Afterwards the case went to the Supreme Court upon appeal, and the judgment below was unanimously reversed. The ground of reversal was the different view taken of the scope of Clough's patent upon a more careful review of the testimony, and it was held that he, being the first person who had applied a valve regulation to a burner, was entitled to hold as infringements all valve regulations applied to gas burners to accomplish the same result by substantially the same method; and the Court say (p. 177):—

> "Although in the Clough structure the burner and surrounding

> tube revolved together in adjusting their position in reference to that of the tubular valve, so as to let in or turn off the supply of gas through such perforations; and although in the Clough structure the flame revolves by the revolution of the burner; and although in the defendant's burners the revolution of the surrounding tube regulated the supply of gas through such perforations, and neither the burner nor the flame revolved; the defendant's valve arrangement must be held to have been an equivalent for that of Clough to the full extent to which that of Clough goes, involving, perhaps, patentable improvements, but still tributary or subject to the patent of Clough. It is true that that patent describes the tubular valve as being inside of the burner tube. But Clough was the first person who applied a valve regulation of any kind to the combination to which he applied it, and, the first person who made such a combination, he is entitled under decisions heretofore made by this Court, to hold as infringements all valve regulations, applied to such a combination, which perform the same office in substantially the same way as, and were known equivalents for, his form of valve regulation."

The same doctrine is again asserted by the Supreme Court in the case of *Duff* v. *Sterling Pump Co.*, 107 U. S. 639. In this case the patent in suit belonged to the secondary or subordinate class; that is to say, an improvement upon a previously known apparatus, as distinguished from a new machine performing functions not performed by any previous mechanical organization. The Court drew attention to this distinction in the following paragraph (p. 639):—

> "The case is one where, in view of the state of the art, the invention must be restricted to the form shown and described by the patentee." . . . "Todd was not a pioneer. He merely devised a new form to accomplish these results." (*Railway Co.* v. *Sayles*, 97 U. S. 554.) "The defendant adopts another form. Under such circumstances the Todd patent cannot be extended so as to embrace the defendant's form."

Another illustration of the application of the doctrine that primary inventions are entitled, in dealing with infringers, to a broad range of equivalents, is the case of *Potter* v. *Stewart*, 18

Blatch. 563. The characteristic of this machine, which distinguished it from prior machines in the art, was the employment of a so-called perpetual feed. This member of the combination consisted of a belt armed with spur points and passing around rollers. Subsequent to Bachelder's invention, the well-known and now universally used four-motion mechanical feed was invented, and the defendant made use of this mechanism in the combination. It was contended, on the part of the defendant, that there was no infringement, for the reason that there had been substituted for the perpetual belt-feed employed by Bachelder, a new mechanism distinct in character, although performing the function of a continuous feed for the fabric to be sewed. Judge Blatchford, after stating the differences between these two feed-motions, and finding, as the obvious fact was, that the four motion feed performed in the combination the same function that the belt-feed performed, goes on to say on p. 564: —

> "These operations had not been performed by any feed, in combination with the other things it is combined with in the Bachelder machine, before Bachelder invented his machine. This being so, any improvement in the feed, while the operations so performed by it are retained, may be patentable in respect to doing something by the use of it which the Bachelder feed would not do, but it cannot be used to perform the operations referred to, without invading Bachelder's rights. To say that this improvement in the feed may be used, because it has features in it which did not exist before Bachelder's feed, leads necessarily to the conclusion that, if those features did exist before Bachelder's feed, it could not be used. Yet, if those features did exist before Bachelder's feed, they could, of course, be used always, as against any claim under Bachelder's feed. Bachelder cannot interfere with those features so far as they do not concern themselves with the performance. in substantially the same way and by substantially the same means, of the same operations which his instrumentalities perform; but, if they do concern themselves with such performance, he can interfere with them, for the very reason that they did not exist before his invention, while, if they had existed before his invention, he clearly could not interfere with them."

The doctrine of *Consolidated Safety Valve Co.* vs. *Crosby Steam*

Gage and Valve Co. 113 U. S. 159, is directly in suppport of the proposition for which I am contending. In this case the claim in the patent to "a safety valve with the circular or annular flange or lip *c*, *c*, constructed in the manner, or substantially in the manner shown, so as to operate as and for the purposes herein described," was construed, in view of the fact that Richardson was the first person to effect a new result in safety valve attachments to steam boilers, by employing a strictured orifice to retard the escape of the steam, smaller in area than the passage for the entrance of the steam, to embrace and include the defendant's structure as an equivalent construction, notwithstanding that the defendant's valve did not have a concaved flange surrounding the periphery of the valve proper to form a huddling chamber, and notwithstanding that in the Richardson valve all the escaping steam passed through the stricture, while in the defendant's valve only a part of the steam passed through one of two ground joints which the valve made with its seat; and the court says, after quoting the claim to "a safety valve with a circular or annular flange or lip *c*, *c*," etc., that it legally covers and embraces "a valve in which are combined an initial area, an additional area, a huddling chamber beneath the additional area, and a strictured orifice leading from the huddling chamber to the open air, the orifice being proportioned to the strength of the spring, as directed."

The same liberal rule of interpretation in cases of patents for primary inventions has been applied at the circuit. *American Whip Co.*, vs. *Lombard*, 4 Clifford, 507; *Dunham* vs. *Kimball*, 17 Fed. Rep., 810.

So also in the case of patents relating to conspicuously new

methods, improvements in an art, or for processes, the same principles govern.

United Nickel Co., vs. *Pendleton*, 15 Fed. Rep., 745.
Tilghman vs. *Proctor*, 102 U. S., 707.
The Telephone Cases, 126 U. S.

Application of this Doctrine to the Present Case.

We conclude, therefore, on this point, with the application of this well-settled doctrine of the law to the case in hand. Morley was the first creator of an automatic button sewing machine. To accomplish this new result he united in one organization a mechanism for feeding the buttons from a heterogeneous mass, so that they could be delivered one by one to sewing mechanism, and to the fabric or leather to which they were to be secured; sewing mechanism for passing a thread through the eye of the button, and securing it to the fabric; and lastly, feeding mechanism for moving the fabric the required distances to space the buttons.

We insist that any person who makes use of those three sets of mechanisms for accomplishing the same result is an infringer, provided, of course, that such mechanisms so in combination, individually considered, are proper equivalents for the mechanisms exhibited in the Morley patent. It may indeed be the fact that, in an infringing machine, the button-feeding mechanism is simpler than that shown in the Morley patent. It may also be true that the sewing mechanism, regarded by itself, is different in construction from that shown in the Morley patent, and also the cloth-feeding mechanism may be of a different type from that employed by Morley. Nay, more, each one of these mechanisms so in combination in a defendant's machine may be worthy of a patent

for the improvements in construction which it exhibits. But if it be true that the button-feeding mechanism and the sewing mechanism and the cloth-feeding mechanism in the defendant's machine, when they are regarded as wholes, and not critically as to their structure, are mechanisms which perform the same function, individually considered, as the corresponding mechanisms in the Morley machine, in substantially the same way, and are combined together to produce the same result, then, indeed, such machine is an infringement; and for the reason that the Morley machine is a primary, and not a secondary invention, and as such is entitled to the broadest interpretation, in its favor, of the substituted mechanical equivalents.

The Keith Patent.

In view of the fact that the defendant's expert attaches no importance to the prior Keith patent, No. 130,581, and does not even comment upon it, it is unnecessary to make any further statement concerning this construction than to say that it had no button-feeding mechanism whatever, and no automatic operation; nor did it have any fabric-feeding mechanism Besides this, it was an abandoned experiment, and its chief value, in this case, is for the complainant, in the fact that it is apparant that there was a want in the trade for a button-sewing machine. Keith undertook to supply this want, and he failed; and this failure, and the inability of Keith or any one coming after him, until Morley, to accomplish a success, emphasizes, in the most pointed way, the necessity for the exercise of high inventive faculty to produce an automatic machine.

Neither can the argument that the Morley patent does not exhibit invention in view of the fact that automatic screw, pin and eyelet machines were previously known, receive favor in the light

of the views of this court as expressed in *Loom Co.* vs. *Higgins*, 105, U. S., 580, wherein in reply to the same argument the court say: —

> "But it is plain from the evidence, and from the very fact that it was not sooner adopted and used, that it did not, for years, occur in this light to even the most skilful persons. It may have been under their very eyes, they may almost be said to have stumbled over it, but they certainly failed to see it, to estimate its value, and to bring it to notice. . . . At this point we are constrained to say that we cannot yield our consent to the argument, that the combination of the different parts or elements for attaining the object in view was so obvious as to merit no title to invention. Now that it has succeeded, it may seem very plain to any one that he could have done it as well. This is often the case with inventions of the greatest merit. It may be laid down as a general rule, though perhaps not an invariable one, that if a new combination and arrangement of known elements produce a new and beneficial result, never attained before, it is evidence of invention."

The inefficiency of the Keith machine, as well as its inadequacy to meet the combination of the Morley patent, is clear from the testimony of Crossman, the only witness who knows anything about it, in answer to Int. 12, (Rec. p. 23,) where he says: — "We move the boot along from one button to another." And in answer to Cross-Int. 39, he says that the buttons were taken out of the raceway by hand. And in answer to Cross-Int. 40, he says that the cloth or leather was fed along by hand, and the buttons spaced by marking by hand. And, finally, in answer to Cross-Int. 47, he says that the machine did not feed the fabric automatically, but that the leather or cloth was moved along by hand, and the spacing of the buttons was wholly determined by the operator.

The Defendant's Machine is an Infringement of the Morley Patent.

The opening testimony of the complainant upon the question

of infringement is given by Mr. Henry A. Chapin. His statement will be found in answer to Int. 7, pp. 11 and 12 of the Record.

We now come to consider the positions taken by the defendant upon this question. The only point attempted to be made is, that the feeding mechanism for the buttons in the defendant's machine, and the sewing mechanism in that machine differs specifically in certain structural characteristics from the corresponding mechanism in the Morley machine. In other words, the argument is, that the first, second, eighth and thirteenth claims of the Morley patent, notwithstanding that they do not contain any limitations to specific elements in combination, are nevertheless to be strictly construed in the same manner as if they had recited in terms and by letters of designation each and every device which enters into the make-up of the groups of devices claimed in combination.

The expert witness for the defendant is not asked the usual question in such cases, but is directed to compare the contrivances and combinations contained in the Lancaster machine with the contrivances and combination described in the Morley patent, and to state their resemblances and differences. He then proceeds, in answer to this question (Rec. p. 30) to describe in detail the specific devices which go to make up the button-feeding group and the sewing group, and having shown that all the devices which go to make up the group of button selecting and presenting mechanism, and the various devices which go to make up the sewing mechanism, in the Morley machine, are not all found as parts of corresponding groups in the Lancaster, or defendant's machine, he concludes by insisting that there should be interpolated into the several claims of the Morley patent in suit each of these minor members composing such groups, and upon this principle of construction there is no difficulty in finding absence of infringement.

He is obliged to concede that both machines contain the same main groups of instrumentalities which when combined together make up the machine. (Rec. p. 30.)

He then states that in the Morley machine there is a hopper valve at the bottom of the hopper in which the buttons are massed, and that this valve picks out the buttons one by one from the hopper and delivers them into an inclined trough.

He remarks that this trough or way is analogous to a similar device described in screw and pin machinery.

He points out that, for the purpose of arranging these buttons in proper order in the trough, there is used a flexible corrugated strip of metal whose office is to roll the buttons over so that their shanks will lie downward in a groove in the bottom of the trough. He next states that there is in the Morley machine a button wheel at the end of the delivery trough, which wheel is provided with pockets, each pocket capable of receiving a button, and that there are means for revolving this button wheel intermittingly. He next points out that when each button has arrived over the notch in the table where it is about to be discharged, it has been turned on its vertical axis one hundred and eighty degrees, and that then a punch operates to drive the first button in the series into a spring holder, and that the next operation is to turn this holder so that the eye of the button will be brought from a vertical into a horizontal plane so that it can be entered by the needle.

These enumerated devices, the expert says, are the "appliances for bringing the buttons successively to positions to permit the needle to pass through the eye of such button." He admits that in one of the modifications suggested the button wheeland punch may be dispensed with, and a light spring substituted at the bottom ofthe button trough to perform the office of holding up the

column of buttons and acting as a spring gate to let out one button at a time.

Having thus forced into the Morley claims relied on, elements or devices which are not enumerated in the claims, or, shortly stated, having written Morley's claims to suit himself, the expert proceeds to show the differences in this portion of the Lancaster machine. He directs attention to the fact that, in the defendant's machine, the buttons start shanks upward; that they are swept by means of a brush (which, by the way, is a well known device used in arranging blanks in screw machinery) into slits which converge into the conveyor, and that the row of buttons is then allowed to pass down such conveyor, which is twisted so as to form, in combination with a plain surface, a button turner which will cause the first button in the series to occupy a position so that its eye is nearly horizontal, to enable the sewing needle to enter therein; and he concludes from his comparison that, because the Lancaster machine has no hopper valve, no corrugated plate, no button wheel, and no punch or spring holder; for the reason that in the machine, the buttons are fed shanks upward, and therefore these contrivances mentioned are unnecessary to be employed to effect the turning over of the button, as required in the Morley machine where the buttons start shanks downward, there is no infringement of the Morley patent.

Of course if the first claim of the Morley patent had recited a combination into which every one of the devices which compose it had entered as elements of such combination, then the reasoning of the expert witness would be entirely correct under the familiar doctrine of *Keystone Bridge Co.* vs. *Phenix Co.*, 95 U. S., 278. But the vice of the reasoning is that such elements are not in fact made necessary constitutents of any of Morley's claims in suit.

If Morley, instead of being at the head of this new art, had

been simply an improver upon a known art, he would then have been required to limit himself to the specific combination of devices which distinguished his improvement from previously known constructions to accomplish the same end, and in such case the words "substantially as described" would have had a far narrower significance than they have in the present case, or, as Mr. Walker very well puts it (Walker on Patents, p. 265):—

> "When the invention at bar is strictly primary, and especially if it is extremely useful, then the word 'substantially' will be made to cover differences alike numerous and important, and even highly creditable to the infringer who invented them."

Comparison of the Button Feeding Mechanism of the Respective Machines.

Upon comparing the Morley and the Lancaster machines with respect to the apparatus or mechanism for feeding the buttons, which compound organization constitutes one of the elements of the first claim, it will be found that in both machines there is a receptacle for shank buttons in a mass. In both machines this mass of buttons passes in order into conveyor guides. In both machines the series of buttons conveyed to the sewing mechanism must be presented successively with their shanks in a horizontal plane, so as to allow of the entrance of the needle into the eyes of such shanks. In the Morley machine the buttons are carried along the raceway shanks downward, and are turned over into proper relation for the needle to enter the shanks by devices such as have been above referred to. In the Lancaster machine the buttons travel along the raceway shanks upward, and the twisting of the raceway causes the buttons to be turned into the proper position for presentation in succession to the sewing needle.

Shortly stated, one machine has *active* devices for turning the buttons, while the other machine has *passive* ones to accomplish precisely the same result. The Morley machine has a button wheel or wheel having recesses for receiving the buttons, and acting also to shut off the column of buttons and take one at a time out of the raceway. The Lancaster machine has no button wheel, but has a spring-gate at the end of the raceway, which serves to shut off the column and allow one button at a time, in combination with other devices, to be withdrawn from the raceway. One of the modifications, however, described in the Morley patent, is the employment of a similiar spring-gate, and thereby dispensing with the button wheel. A drawing of this modification is shown at Fig. 23. In this modification an active device is used to open the spring-gate and discharge the button, and the same thing is true in the Lancaster machine, because the needle entering the eye of the button and passing a thread through the same, is the active instrument in combination with the sidewise movement of the raceway to effect the same result.

Now, can it be of the least importance in such an invention as this of Morley, that one of the concrete elements or organisms entering into the grand combination has been modified, or simplified, or improved by an infringer?

Applicants for patents are entitled, as this Court has repeatedly said, to frame their claims to suit their true invention; and consequently, where a patentee, or his *ex parte* application, states his claim too narrowly by introducing more elements than are necessary, or qualifying unnecessarily the characters of the elements, he is bound by such statement, and his specification is to be construed most strongly against himself.

Keystone Co. vs. *Phenix Co.*, 95 U. S., 274.
Gage vs. *Herring*, 107 U. S., 648.

Mr. Morley, however, took good care not to make a restricted

claim, and therefore the defendant undertakes to make one for him.

The Fabric Feeding Mechanism.

With reference to the compound element of the cloth or leather feeding mechanism, the expert concedes that it is substantially the same in both machines, the needles in both operating to feed the cloth or leather while inserted in the same. And every one must agree with the witness, that there is "no substantial difference between the leather-feeding mechanism of the two machines, although in the Morley the two needles swing like an inverted pendulum, while in the Lancaster the single needle reciprocates in a straight line." (Renwick, p. 34.)

The Sewing or Stitching Mechanism.

The remaining compound organization constituting the third element or constitutent of the Morley combination is the sewing or stitching mechanism. In this part of the defendant's case we find a labored argument covering eight pages, on the part of the expert, to point out the differences between the kind of stitch used in the two machines for fastening the button to the leather or fabric. Undoubtedly the two kinds of stitches are different, specifically considered The Morley makes use of what is known in sewing machinery as the chain stitch. The Lancaster employs a stitch which is made by looping the thread upon itself and causing the shank of the button to occupy the bight of the loop so as to prevent it from pulling out as it would otherwise do.

The drawings of Fig. 7 to Fig. 11 of the Mathison patent show clearly the concatenation of the threads of the Lancaster stitch. Perhaps there are advantages in the use of the stitch which the defendant's machine employs; but the Morley patent is not for any particular kind of stitch or any particular kind of mechanism for making the stitch. Whenever the form of stitch is changed in a sewing machine, the instrumentalities for operating upon the thread must necessarily be different. Morley tells us, in a paragraph already quoted from his patent, that the machine which he has described in the patent is "only one of different mechanisms which I have contemplated, and which may be effectually employed for carrying out the main feature of my invention,—to wit, the automatic mechanical sewing of buttons to a fabric"; and he then proceeds to suggest a different form of stitch which can be employed, and which might be either the Grover & Baker chain stitch or the Wheeler & Wilson double-thread lock stitch. It will, indeed, be a surprise to Morley to be judicially informed that his invention, which by confession of the defendant stands at the head of this art, is in reality nothing more than a patent for making a particular kind of stitch.

In dealing with the group of devices in the Morley patent which make up the sewing mechanism of the combination, the expert witness for the defendant pursues the same line of discussion which he adopted when considering the devices which make up the button selecting and feeding mechanisms of the two machines. He recognizes the fact that the results accomplished by the two machines in sewing a row of buttons on the fabric are the same, and then, as a foundation for his subsequent reasoning, says:—

> "But if the results be compared, not generally, but specifically, and as including the concatenations of thread which will form the seam and attach the buttons to the leather, then the results are different." (Rec. p. 38.)

The whole argument as to the differences between the two machines in respect to the means for sewing or fastening the buttons to the fabric rests upon the proposition that the concatenation of the thread which makes up the stitch in the defendant's machine is different from that which is found in the Morley machine. In the machine of the patent, the button is sewed to the leather by a well-known variety of stitch, and the buttons are spaced at the proper distances apart by the feeding mechanism which moves the cloth along, and these feeding devices are moved alternately different distances to alternate short stitches with long stitches between the buttons. This last named feature is equally true of the sewing mechanism of the defendant's machine. It is not denied that the button is taken possession of in both machines by the sewing mechanism. The needle in both machines enters the eye of the button, but in the defendant's machine the thread is looped so as to embrace also the shank of the buttton, and great importance seems to be given to the circumstance that if the buttons in the defendant's machine were not present a fastened or locked stitch would not be formed in the fabric. The difference is simply this: in the defendant's machine the sewing mechanism would go through its proper motion to make the long and short stitches, but if the buttons were not there present a succession of loops would be formed which could be pulled out of the leather. When the buttons are present the thread which forms the stitching is looped around the neck of the button, and undoubtedly by the fact of the presence of the button becomes a lock stitch.

The deposition of the plaintiff's expert is simply a labored argument to inject into the first and principal claim of the Morley patent the particular sub-elements which make up the button-feeding mechanism and the sewing mechanism. It has already been stated that in the Morley machine the buttons are in the first instance taken out of the hopper where they lie in a mass, and ar-

ranged in a raceway or conveyor. The shanks of the buttons lie pointing in all directions. It becomes necessary to turn them over when they are not in proper line, and so that the eyes will lie in the slot or groove of the raceway and their bodies rest in the trough portion of the same device. Inasmuch as the end to be accomplished is the presentation of the buttons to the sewing mechanism so that the eyes of their shanks shall lie in a horizontal plane at a pendicular, or nearly so, to the plane in which the sewing needle right angle certain active devices are necessary, in the Morley organization, to turn the irregularly disposed buttons into the proper position for correct presentation to the needle, and therefore the defendant's expert proceeds to enumerate each one of the sub-elements which enter into the composition of the button feeding mechanism composing one of the compound elements of the first claim of the Morley patent. He enumerates them as follows (Rec. p. 39):—(1) hopper; (2) hopper-valve; (3) trough; (4) elastic corrugated strip to roll the buttons in such manner that their eyes shall fall into the grooves in the bottom of the trough; (5) the button-wheel and its supporting table; (6) the punch for punching the button out of the button-wheel into the spring split spoon; and (7) the spring split spoon.

It has also been stated that the defendant's machine delivers the buttons in the first instance from the hopper into the raceway shanks upward, and therefore it becomes unnecessary to employ any active devices for turning the buttons so that their shanks shall stand in the proper position. The defendant's expert finds the differences between the two machines in this particular to be as follows (Rec. p. 40): —It is admitted that the hopper is the same in both machines. It is denied that the Lancaster machine has any hopper valve intermediate of the hopper and the raceway. It is admitted that the defendant's machine has a conveyor trough, but it is claimed to be different from Morley's trough in the circumstance that it is arranged to hold the

buttons shank upwards and is formed on a twist, something like a winding stair-rail, so that the buttons as they descend along such inclined trough toward the sewing mechanism will be turned ninety degrees, or far enough so that the eyes of their shanks will lie in a horizontal plane and in a position where the descending needle can enter such eyes. It is denied that the Lancaster machine has any corrugated strip for rolling the buttons over, any button wheel or devices for turning the button 180 degrees on a vertical axis, any punch to discharge the button out of the button wheel, or any device for taking the button from the button wheel, turning it 90 degrees, and carrying it over to the needle.

When brought down to the last analysis, the defendant's position is, that the defendant's machine is substantially different from the Morley machine because the buttons are presented to the inclined conveyor trough from the hopper with their shanks pointing upward, and therefore no devices are required for bringing the buttons into the right position, as are required in the Morley machine, where the buttons, when they pass into the entrance to the conveyor-ways, have their shanks pointing in different directions. The difference between the sewing mechanism in the two machines is founded on the fact that the concatenation of the threads to form the stitch-fastening is different in the two machines, and necessarily the devices which are in co-operation to make the respective stitches are different.

Now, if the patentee had made each of these sub-elements, which have been forcibly injected into the claim, essential members of the combination, then he would have been bound by the statement (*Vance* vs. *Campbell*, 1 Black, 427.) But the patentee has done nothing of the kind. His invention required no such limitation. It was a broad invention. It was the first sewing machine for automatically attaching buttons to fabrics that was

known to the art. It contains three essential groups of instrumentalities: —

1. Button-feeding mechanism;
2. Sewing mechanism;
3. Cloth-feeding mechanism; all co-operating to produce the result of enabling buttons cast in a mass into a hopper to be selected one by one from the mass and sewed on to a piece of leather or cloth and spaced regularly in their positions. Mechanism may be indispensable for the operation of a mechanical structure, but the whole of it is not imported into the combination unless the patentee chooses to do so.

The court, in the case of an invention which occupies, relatively to the art to which it appertains, the rank and position of the Morley invention, will not cast about for means to defeat, on technical grounds, the true scope and effect of the claims of the patent. It is apparent, from an examination of the long argument of the defendant's expert, that the theory upon which he proceeded to maintain non-infringement was to assume that every one of the sub elements entering into the composition of the concrete organizations which make up the combination recited in the first claim, must be found in the defendant's machine in order to create an infringement. This is clear from the state ment of the witness on page 40.

> "Looking now at the Lancaster machine to see if it contains the invention referred to in this claim, I search to find whether it has the elements or sub-elements covered by this claim, or any equivalents or known substitutes for them; and, as I understand, *I must find all these sub-elements in the Lancaster machine in order to assert that it contains the invention referred to in this claim.* I cannot find all the elements, nor the equivalents of them, in the Lancaster machine."

It is not contended at all, on the part of the complainants, that the several claims of the Morley patent in suit are for a result or an effect irrespective of the means by which such effect is accom-

plished. It is conceded that, notwithstanding the fact that Morley was the first person to produce a practical machine for automatically selecting buttons from a mass and securing them to leather or other fabric spaced at regular distances apart, the field is nevertheless open to every subsequent inventor to accomplish the same general result, if he can, by substantially different means. I am only insisting that in determining whether the means employed by the defendant are substantially the same means as those employed by Morley, a liberal interpretation in favor of Morley should prevail as the result of the fact that he is confessedly a pioneer in this branch of the mechanic arts. I submit that broad claims such as we find in the patent are not to be minimized by dissecting the several compound organisms which make up the combination, and thus requiring that the defendant's apparatus shall be a Chinese copy of the same. Upon the theory of the defendant the first claim of the Morley patent is to be construed as if there were embraced in it by express statement or necessary intendment each and every one of the particular instrumentalities which co operate to accomplish in each of the compound elements of the claim a specific effect.

The rule of decision in such cases is plain to be gathered from the decision of this court in *Consolidated Valve Co.* vs. *Crosby Steam Gage and Valve Co.*, 113 U. S., 157. In that case the record discloses that notwithstanding safety valves had been previously known to the art, composed of a combination of the same general elements which entered into the Richardson valve, Richardson was the first person to so organize such apparatus that the huddling chamber should have an area of steam entrance larger than the area of the exit passage, and thus, as the result of a retarding stricture to such huddling chamber, induce a new mode of operation in the whole apparatus. This fact having been made clear to the court, it gave a construction to the claim which should cover the essential features of the invention. It was held

that it was not limited to a construction which consisted of a common valve disc with a radially projecting concaved annular flange forming a huddling chamber, and through which all the escaping steam must pass, but that the patent was entitled to cover any steam valve in which were combined an initial area, a supplemental area, a huddling chamber beneath such supplemental area, and a strictured orifice of discharge having the characteristics set forth in the patent, and thus accomplish the result of automatically relieving the pressure of the steam in the boiler without incidentally reducing the pressure to such an extent as to be wasteful. Consequently, under this rule the Crosby valve, which obviously did not have a huddling chamber arranged around the exterior periphery of the valve proper, but which did have an initial area for steam pressure, a supplemental valve area, and a huddling chamber beneath such supplemental area with a strictured orifice, was held to be an infringing structure.

Applying this rule to the present case, the inquiry is, whether in order to constitute an infringement the defendant must employ in his machine every one of the minor devices which enter into the composition of the concrete organisms in combination covered by the patent. There is no necessity in the present case to do the least violence to the language of the claim by disregarding any specific qualifications affecting the structure of the concrete mechanisms in combination. We submit that it is proper to inquire into the true character of the real invention disclosed by the patentee. We start with the agreement on both sides that there are in the patentee's machine, as well as in the defendant's machine, three groups of instrumentalities in combination, and that these several groups, when regarded with respect to the offices which they perform and the results which they accomplish, are the same. It is agreed also that the cloth-feeding mechanism

in both the plaintiffs' and the defendant's machine are equivalents for each other, and are therefore the same in the law.

The contention arises upon the fact that the button-feeding mechanisms in the two machines are specifically different from each other in the following particulars: In the Morley machine the buttons are taken from the hopper one after another with their shanks pointing in various directions, and are then, by means of an active device (which is a corrugated plate) arranged in the conveyor-ways so that their shanks shall stand pointing all in one direction, but downward. while in the defendant's machine the buttons, when they emerge from the hopper, are entered into the conveyor-ways with their shanks pointing upward. In both machines the conveyor-ways are inclined so that the buttons will pass down the same by gravity. In the Morley machine, in combination with the conveyor-ways, is a button-wheel and a punch to remove a button out of the wheel and transfer it to a spoon-like device, which latter causes the buttons in succession to be turned at an angle of ninety degrees, so that their shanks will lie in a horizontal plane with their open eyes in the path of the needle of a sewing mechanism, while in the defendant's machine the conveyor-ways themselves are twisted so as to form a path which is the section of a spiral, and thereby cause the buttons as they pass along the ways to be turned ninety degrees for the same purpose.

The Morley invention is not confined within such narrow boundaries as will limit it in the way the defendant contends. We are to inquire what the essential characteristics are of the several organisms which are stated respectively to be the button-conveying mechanism, the sewing mechanism and the fabric-feeding mechanism. The function which the first element is to perform in the organization covered by the Morley patent is to cause shank buttons to be taken from a mass and conveyed to a point

where they can be taken possession of one after another in succession by the needle of the sewing machine and be turned, in their passage from the hopper along the conveyor-ways to the needle of the machine, so that the open eye of the shank will lie in the path of movement of needle. It is plain that this function is performed in both machines.

The Means to Execute this Function are Substantially the Same in Both Machines.

The next question is, are the means employed in the defendant's machine substantially the same means, as the law regards substantial equivalency, as the means employed in the Morley machine? It is obvious that in both machines there is a hopper into which the shoe-buttons are tumbled in a mass. It is also apparent that in both machines there are inclined conveyor-ways which lead from the hopper to the sewing mechanism. Now, it only remains to ask whether the means employed for turning the buttons in the defendant's machine so that the eyes in their shanks will stand in the path of the needle, are within the means employed in the Morley machine. In the Morley machine the buttons when taken into what may be well called the vestibule or non-grooved portion of the conveyor ways from the hopper, have their shanks standing in various directions, and therefore a flexible corrugated strip of metal which is oscillated to and fro operates to partially roll over the buttons so that their shanks will occupy a deep groove at the bottom of the trough. Now, in the defendant's machine the reciprocating brush which sweeps over the bottom of the hopper in which the buttons lie in a mass, operates in an equivalent way with the corrugated vibratory plate of the Morley machine. Those buttons which by its action have been rolled over so that their

shanks stand upward, will enter slits in a metal plate which converge into a single pair of conveyor-ways.

The difference thus far is, that in the Morley machine the buttons are arranged with their shanks all lying in one direction after they have emerged from the hopper and entered into the vestibule of the conduit, while in the defendant's machine the same thing is accomplished by equivalent devices before the buttons have entered the main conveyor or conduit.

We will next compare the devices employed in the machines respectively for bringing the buttons one by one so that their shanks will stand in a horizontal plane with their eyes open to receive the sewing needle. In the Morley machine the buttons pass down the conveyor-ways with their shanks occupying the groove in the ways and all pointing downward. When they reach the end of the ways they enter one by one into a button-wheel, and are turned by the revolution of the wheel 180 degrees, that is to say, so that the shank of each button so turned will stand pointing in the opposite direction. They are then successively removed by a punch into a split spoon-shaped receptacle which presents them in succession to the needle, and also for that purpose turns them ninety degrees, so that the shank will occupy a horizontal plane.

In the defendant's machine the buttons are not required to be turned any more than ninety degrees, because, as already explained, they are rolled over by the brush in the hopper, and those of them which have their shanks upward are made to enter slits, or vestibule entrances to the main conveyor-ways. To accomplish the turning of the button so that its shank will occupy

a horizontal plane and be ready to receive the needle when it has reached the end of the ways, the conveyor-ways are twisted, as already explained. When the needle enters the eye of the button it is pulled out of the conveyor-ways, and for that purpose the end of the ways are hinged, so as to be capable of moving away from the button, but the button cannot move with this portion of the ways because it has been taken possession of by the sewing mechanism.

The complainants insist that these differences are merely formal, and not substantial, and are plain equivalents for each other. In the one case active instrumentalities effect the turning of the buttons, in the other case the twisting of the ways accomplish the same end. It has long been known in the mechanic arts that a curved path can be employed to change the plane occupied by a body passing along that path. The Morley patent furnishes an illustration of this fact. Thus, the conveyor-ways, as shown at Fig. 1 of the Morley drawings, are slightly inclined from the horizontal when the buttons start on their journey, but at the end of the journey the ways stand nearly vertical, and the buttons in fact have been turned from a nearly vertical position to a horizontal position.

The defendant is able to employ this well known mechanical device in his machine, for the reason that he enters his buttons from the hopper shanks upward, but Morley could not well employ the same mechanical agency, because he enters his buttons shanks downward. The character of the result in both cases is the same, and the means employed are substantially the same, although not specifically the same, the only difference being that active agents for turning the button are used in the

one case, and passive agencies to effect the same turning are used in the other case

In fact the structural differences just described are reduced by the modified form of construction of this part of the machine suggested in the Morley patent. (Rec. p. 143, 144.) This the defendant recognizes, and the expert states:—

> "In the modified form of the Morley contrivance there is a spring gate for holding the buttons up; in the Lancaster machine there is a similar spring, this spring, or its equivalent being common in screw-blank and eyelet machines for the purpose of holding up a column of blanks and permiting them to be removed one by one; but in the Morley machine this spring gate is opened by a special contrivance, so as to permit the buttons to drop, while in the Lancaster the button itself, as before described, opens the spring when the lower end of the button-holding contrivance is removed sideways." (Rec. p. 33.)

This modification, as the patent says (Rec. p. 144), "dispenses with the use of the button-turning wheel 60 and its operating devices, and also with the button plunger *h*, and operates as follows." It also dispenses with turning the button 180 degrees on a vertical axis.

So that it appears that the only difference between the two machines, when we consider this last named modification, is that a spring gate to let the buttons be discharged one by one is opened in the Morley machine by an active device for that purpose, and in the defendant's machine the end of the conveyor-ways are moved laterally by an active device, and the button is detained and opens the spring gate because the sewing needle and thread have entered its eye.

For convenience to the eye we have arranged in parallel col-

umns the corresponding devices appertaining to button selecting and presenting mechanisms of the two machines.

Morley.	Lancaster.
1. Hopper with buttons in a mass.	1. Hopper with buttons in a mass.
2. Corrugated vibrating plate for partially rolling over the buttons for causing them to be arranged with their shanks all pointing downward in the grooved conveyor.	2. Sweeping-brush for partially rolling over the buttons and causing those whose shanks stand upward in the hopper to enter slits or entrance passages to conveyor-ways.
3. Conveyor-ways for connecting hopper with a sewing mechanism.	3. Conveyor-ways for connecting hopper with a sewing mechanism.
4. Button wheel, punch and split spoon for turning the buttons in succession when they reach the end of the conveyor-ways so that their eyes shanks shall stand in a horizontal plane ready to receive the needle of the sewing machine.	4. Twisted ways for turning the buttons 90 degrees into a horizontal plane so as to receive the needle.
But the modification described dispenses with the button wheel and punch and requires only the turning of the button on a horizontal axis 90 degrees.	

The Sewing Mechanism Element.

In both machines the sewing needle with thread is employed for the purpose of fastening the buttons to the fabric. The thread

in both cases is continuous, and follows the fabric as it is moved along by the fabric-feeding mechanism. In the Morley machine a common well-known stitch is employed, which may be the Grover & Baker type of stitch, or another form of stitch known as a chain stitch. In the defendant's machine the stitch is peculiar in this, that a loop is formed which is finally drawn around the shank of the button and which causes the button shank to present a lock against the drawing out of the stitch. Other portions of the same continuous thread pass through the eye of the button shank and through the leather or fabric to which the button is to be secured. A plain exhibition of this stitch is found in the drawings of the Mathison patent, Rec. p. 146.

It is submitted that, although the defendant has devised a new concatenation of threads which may be advantageous in securing a shank button to a fabric, this fact does not prevent the sewing mechanism employed from being a substantial equivalent for that shown in the Morley patent. The essential thing does not reside in the peculiarity of the stitch for fastening the buttons to the leather, but in the combination of the sewing machine needle with the mechanism for operating it with a shank button, the eye of which has been held in a horizontal plane in the path of the needle, and so that the thread which the needle carries can attach the button to the fabric. Whether in making this attachment a loop is passed over the button head or not, is entirely an immaterial circumstance. The device indeed by which the defendant accomplishes this improvement, if it be such, would very properly be the subject of letters patent.

And now a word upon the meaning of the words "known equivalents."

It seems to be the defendant's view that, if a stitch such as that which he employs to fasten his buttons to the fabric was previously unknown in the art, this fact is decisive on the ques-

tion of infringement. So also the defendant seems to suppose that, unless it can be shown that it was previously known that shank buttons could be introduced into a conveyor-way shanks upward, and be turned to a horizontal plane by the twisting of the conveyor-ways, this fact is decisive on the question of infringement.

We respectfully submit that the words "known equivalents" as applied by this court in various cases do not imply that the precise thing had a prior existence. It is of course impossible for the plaintiffs to show that there was any previously known button selecting and conveying mechanism, for the best of all reasons —that Morley created the art of sewing buttons automatically to fabrics. It is also impossible for the plaintiffs to show that any sewing machinery had a previous existence which formed a stitch not only through the fabric, but also carried a loop around the neck of the button, somewhat analogous to the operation of sewing on buttons by hand. They are unable to show this for the same reason—that there previously existed no machinery of this character. What is meant, as we understand the meaning of the decisions of this court, by the term "known equivalents", is the employment by the defendant of known mechanical powers or devices which in the mechanic arts, are recognized substitutes for each other, as, for example, a weight in place of a spring; a cam surface, either active or passive, in place of a lever or wheel to change direction of motion; a screw, in place of an inclined plane. Allsuch known substitutes in the mechanic arts are specifically different from each other. They are equivalents for the reason that they perform the same result, and have been used by man indifferently to perform such result. So here we say that the brush to roll over the buttons in the defendant's machine is the obvious equivalent of the corrugated plate in the Morley machine. The mode of operation in the defendant's machine of rolling these buttons so that their shanks shall point in a particular direction

before entering the main conveyor-ways, is the same mode of operation found in the Morley machine, where the corrugated plate rolls over the buttons, during their passage to the grooved conveyor-ways, so that their shanks shall all point in the same direction. So also the button-wheel, the punch, and the split spoon in the Morley machine for turning the button to the proper plane for presentation to the sewing needle, finds its plain equivalent in the cam action resulting from the twisted ways in the defendant's machine. When we regard the modification of this part of the Morley machine the actual differences are reduced, by the elimination of the button-wheel and the punch, and all turning of the button, execpt a turning of ninety degrees (as in the defendant's machine) upon a horizontal axis, to the employment in both machines of a spring gate; but in one machine the spring gate is opened by an active device, and in the other case an active device moves a portion of the conveyor-ways away from the button which is held by the needle. No new mechanical principle or law of physics has been invoked for service in the construction of the defendant's machine; the mechanical powers involved are known substitutes or equivalents for those employed in the Morley machine to accomplish the same result.

Utility of the Morley Invention.

The average number of pairs of shoes which could be supplied with buttons by hand sewing by a single operator is stated by defendant's witnesses from ninety to one hundred.

Jennings, p. 77, Cross-Int. 32.
Sawtell, p. 89, Cross-Int. 100.
Bridgham, p. 93, Cross-Int. 29.
Howe, p. 106, Cross-Int. 43.
Flynn, p. 111, Cross-Int. 30.

The average number of pairs of shoes that can be supplied with buttons by a single Morley machine in one day is variously stated by defendant's witnesses at from three hundred to seven hundred.

Jennings, p. 75, Int. 12, Cross-Int. 62.
Sawtell, p. 89, Cross-Ints. 101, 102.
Harris, p. 101, Cross-Int. 32 and Cross Int. 33, and p. 138, Int. 49.
Howe, p. 105, Int. 27.

A considerable portion of the defendant's record is made up of the testimony of witnesses who were called for the purpose of showing that the Morley machine was, in various instances, unsatisfactory in its operation, and also that in some instances the Lancaster machine was preferred. Now, all this kind of testimony is of no legal value. The testimony that we have above referred to in favor of the Morley machine, showing its large percentage of advantage in point of economy over hand sewing, is extracted from witnesses who, to say the least, were in the interest of our adversaries. The best reply to the animus of this testimony is that which the complainants have furnished in the deposition of Charles A. Sinclair, the treasurer of the complainant companies.(Rec. p. 115.)

The business of constructing machines under the Morley patent has covered only a period of about eighteen months. As a matter of course, an entirely new machine so complex in its character as the Morley, when first put upon the market for regular work, is liable to exhibit defects which can be readily remedied in subsequent machines. It would be anomalous in the history of new machinery if such were not the fact.

Mr. Sinclair says that there have been put out during the last eighteen months about one hundred machines, and that of these

from seventy to eighty machines are paying regular monthly royalties. The work done by shoe manufacturers varies in quantity. Some months the average will be ten cases a day, in other months twenty to twenty-five cases will be turned off. When the product is only ten cases, the work will be accomplished by a single machine. When a larger product is required, two or more machines will be needed. Thus, although the company have out one hundred machines, the royalties based upon the amount of work done will be less at certain periods of the year and in certain months than at other periods. Thus in the month of January, as Mr. Sinclair says (Ans. to Int. 8), while there were one hundred machines in the hands of manufacturers, under lease, the royalties received were only on about seventy-five machines. It should also be stated that these machines are not sold outright, but are rented on a royalty based upon the work done by each machine.

There is an active demand among shoe manufacturers for the Morley machines, and the company is behind its orders (p. 116, Int. 9).

This demand has constantly increased. Thus, in January, 1883, there were only fifty machines in the market. In January, 1884, there were one hundred. The royalties have increased from $350 per month for the month of January, 1883, to near $900 for the month of January, 1884. In round numbers, at the date of the trial in the Circuit Court, the royalties on machines among manufacturers amounted to about $1,000 per month (Ans. to Int. 10.)

The class of manufacturers who employ these machines are recognized as the leading shoe manufacturers in the country.

The names of some of them are given in answer to Int. 12, p. 117.

The royalty is twelve cents for every thousand buttons sewed, and returns are made monthly (Int. 18.)

The defendant, Charles B. Lancaster, has leased one of the Morley machines, and has paid regularly a royalty of from $15 to $20 a month for its use since it was delivered to him (p. 118 Int. 21.)

It would seem as if no better answer could be given to a line of testimony seeking to disparage the Morley machine than the fact that the defendant himself approves it and is paying for its use.

Mr. Sinclair states (Int. 22) that the average day's work from a Morley machine is from seven to ten cases.

A specific answer to the insinuations that the Morley machine is unsatisfactory is found in Mr. Sinclair's answer to Int 24, p. 119, wherein he says that the reputation of the machine has improved since it was first put upon the market; that, in the first instance, a contract was made with a Mr. Secor for the construction of one hundred machines. It was presently ascertained that he did not have the proper tools and facilities to make a first-class machine, but that it was too late to put the work into other hands. The first machines which he turned out were placed among shoe manufacturers, and after they were started complaints began to come in. Efforts were made to remedy these complaints but it was found that the real trouble was the fact that the machines were not well constructed. The company then employed a first-class constructor in the effort to reconstruct the machines, but it was soon found that this would cost more than to build entirely new machines. After a new lot were constructed, however, with

responsible and able machine builders, the result was entirely satisfactory.

In cross-examination, Mr. Sinclair states that the Morley machines are run principally upon women's and children's shoes, and upon all grades of these shoes. At first, as is very natural with manufacturers, they were apprehensive that a radically new machine of this character, accomplishing what may be fairly said to be difficult and unexpected results, could not be used to advantage upon the highest grade of work; but these objections are wearing away, as the buttons are sewed on more firmly than by hand. At the present time, manufacturers are using the machines generally on their best grade of work. (Cross-Int. 27.)

The newly constructed machines did not differ in principle form the original machines, but they are made interchangeable as to their parts, and as far as possible perfect in construction. (Cross-Ints. 28 and 29.)

The machine in use to-day, except that it is better constructed and better proportioned as to its parts, is the same as the original machine. No alterations of any material character have been made. (Cross-Ints. 33-35, and Cross-Int. 39.)

It is apparent, therefore, from the testimony, that the Morley machine accomplishes a great saving over hand labor, and is in every sense, both of the patent law and of commercial understanding, new, useful and valuable.

The prices paid for labor, based upon the number of buttons sewed on, is largely in favor of the economy of the Morley machine. According to one of the witnesses, from thirty to forty cents were paid to a hand operator per case, and only fifteen cents

per case to a machine operator; and this too with comparatively unskilled labor. (Harris, p. 102, Cross-Int. 42.)

Another states that the wages paid to an operator on the Morley machine was twenty cents for sixty pair of boots, and that the price paid for hand sewing was seventy-five cents for the same number. (Howe, p. 106, Cross-Int. 47.)

Another says that for hand work, eight cents per hundred buttons were paid, and less than three cents per hundred were paid for machine work. (Flynn, p. 149, Cross Int. 34.)

The statement of Mr. Sinclair as to the imperfections of the first lot of machines is a frank and truthful statement; but even these machines, although not up to the standard which the company desired, was capable of doing excellent work, and exhibited no more deficiencies than any new machinery is likely to show. (See Knight's testimony, p. 72, Ints. 91-95.)

We conclude that, upon the evidence and upon the law, the appellants are entitled to have the decree of the Circuit Court reversed.

BENJ. F. THURSTON.

SUPREME COURT OF THE UNITED STATES.

OCTOBER TERM, 1888.

No. 165.

THE MORLEY SEWING MACHINE COMPANY ET AL.

v.

CHARLES B. LANCASTER.

BRIEF FOR DEFENDANT AND APPELLEE.

J. E. MAYNADIER,
GEORGE E. SMITH,
of Counsel.

ADDISON C. GETCHELL, PRINTER, 55 OLIVER ST., BOSTON.

Supreme Court of the United States,

OCTOBER TERM, 1888.

No. 165.

THE MORLEY SEWING MACHINE COMPANY ET AL.

v.

CHARLES B. LANCASTER.

BRIEF FOR DEFENDANT AND APPELLEE.

The patent of plaintiffs is for a combination of mechanism operating together and forming a machine for sewing buttons on fabrics.

(Patent No. 236,350, at end of record.)

The only claims of the patent which plaintiffs say are infringed by defendant's machine are the 1st, 2d, 8th, and 13th.

Without reciting the language of the several claims in full, it is sufficient to say that they set out three main sets or groups of instrumentalities in combination, to wit, —

1. Mechanism for holding the buttons in mass and delivering them separately in proper position over the fabric, to be attached thereto by the sewing and stitching mechanism.

2. The stitching mechanism.

3. Mechanism for feeding the fabric along so as to space the stitches, and consequently the buttons when sewed on.

Or, stating it briefly, —

1. Button-feeding mechanism.
2. Stitching mechanism.
3. Cloth-feeding mechanism.

Each of the four claims ends with the words, "substantially as set forth," or "as specified," or "as set forth."

Plaintiffs do not claim to have invented any of the parts or elements of mechanism found in the defendant's machine. *Plaintiffs claim only that the combination is infringed.*

It is admitted that defendant used a machine which contained button-feeding mechanism, stitching mechanism, and cloth-feeding mechanism in combination, and that defendant's machine would automatically attach buttons to fabrics.

Defendant claims he had a right to use an *automatic machine*, provided only he did not use in his machine the instrumentalities or mechanisms of plaintiff, or colorable imitations or equivalents thereof, or known substitutes therefor.

Defendant claims the right to use in his machine any elements of plaintiffs' combination which Morley did not invent and the parts whereof he does not claim, providing only he does not use *all* the elements of plaintiffs' combination or their equivalents.

Does the defendant's machine infringe the plaintiffs' combination as claimed in his patent?

That question is to be answered by an examination of the Morley combination as claimed, and comparison of the same with the Lancaster machine, and applying the rules of law to the facts as they shall be determined.

We submit that, before holding that the Lancaster machine

infringes Morley's combination, all these things must be found to be true; to wit, —

1. That the Lancaster machine has substantially the same elements of mechanism or their known mechanical equivalents in combination;

2. That those several elements perform their respective functions in substantially the same way; and

3. That the same result is accomplished.

Considering the last proposition first, unquestionably the same final or general result is accomplished by both machines, to wit, shank buttons are attached to fabrics with thread.

We may consider the other two propositions together, for they are dependent one upon the other, for if the elements in the Lancaster machine are substantially different from the corresponding elements of Morley's combination, it will naturally follow that the several elements perform their respective functions in a different way.

What are the elements of mechanism in combination in Morley's patent, and which of those elements are found in the Lancaster machine?

In this examination of details little help is rendered by the testimony of plaintiffs' expert.

In his direct examination his explanation of the plaintiffs' patent and the complicated machine therein described is in his answer to interrogatory 3, and that answer is mostly made up of quotations from the 1st, 2d, 8th, and 13th claims of the patent. *And no machine has been put in evidence.*

His only examination and explanation of the Lancaster

machine was in answer to interrogatory 7. That answer is also largely made up of the words of the 1st, 2d, 8th, and 13th Morley claims, coupled with a general statement that the combination, or several combinations in general, are present in the Lancaster machine.

He makes no detailed examination whatever.

On the other hand, defendant's expert, Mr. Renwick, makes a careful analysis of the machine described in the Morley patent, and compares its several parts with the corresponding parts of the Lancaster machine. (Page 40.)

He says, and it is evident, that "both machines contain three main groups of instrumentalities, which, when combined together, make up the machine." (Record, p. 30.)

They are, as before stated, —

(1) "Mechanism for holding the buttons in mass and delivering them separately in proper position over the leather, to be attached thereto by the sewing and stitching mechanism.

(2) "The stitching mechanism.

(3) "The mechanism for feeding the leather along so as to space the stitches, and consequently the buttons when sewed on."

(1) As to *button-feeding mechanism:*

In the Morley patent a hopper holds the buttons, and the bottom of the hopper has a hole and valve through which, by means of a spring, rod, &c., one button at a time is taken from the hopper and passed into the inclined trough.

Mr. Renwick says this trough is substantially like the *ways* in pin and screw blank machinery. (Page 30.)

The trough is grooved, and over the end next the hopper a corrugated strip of iron is made to oscillate for the purpose

of making the buttons lay shank down in the deep groove at the lower end of the trough. Being thus arranged, the buttons, by force of gravity and the jarring of the machine, slide down the trough and come to the end of it, which is near the front of the machine and near the needles; and the buttons are held in the trough with their heads towards the front of the machine by the button wheel, so called.

This wheel rests on a table, and has pockets which receive the buttons, one at a time, from the trough. The wheel moves each button round a half circle and brings it successively over a hole in the table, when a punch drives the button out of the pocket and into a "split spring spoon," which then lies immediately under the hole in the table. The button is then turned by the spoon 90° to bring the eye parallel with the fabric.

If the machinery designed to accomplish all these movements and turnings of the buttons has operated as intended, the eye of the button is now in a position over the path of the needle and ready to be sewed on.

There is a modified method of transferring buttons from the lower end of the trough to the path of the needle. But it is perhaps not necessary to mention it, as neither the one nor the other set of "appliances for carrying the buttons successively from the trough to the sewing drivers" are present in the Lancaster machine.

Turning to the Lancaster machine, we find a hopper to hold the buttons.

Mr. Renwick says (page 40) the hopper in both machines is "much like those used in pin, screw blank, metallic cartridge shell, and eyeleting machinery."

But there the similarity of the button-feeding mechanism of the two machines ends.

And this is not a question of equivalents or substitutes.

There is an entire absence in the Lancaster machine of the hopper valve, the corrugated strip, the button wheel, punch, and split spring spoon, and the mechanism required to operate those several parts.

It may be claimed that the "raceway" of the Lancaster machine is the equivalent of the trough of the Morley patent. It is submitted such is not the case.

The Lancaster raceway is simply a flat surface of metal on which the buttons slide down from the hopper to the needle in a curved path. The buttons rest on their heads and have their shanks upwards between two strips of metal, or one piece of metal with a slit in it. The lower end of the raceway is so twisted as to bring the eye of the button under the path of the needle in a position to be entered by it. The hopper of the Lancaster machine has a reciprocating brush which sweeps over the bottom and rolls the buttons into the several slits covering the upper end of the raceway with their shanks up, this being the position which a handful of buttons more naturally takes.

These slits converge into a single slit, and the buttons lie in a single column, shanks up, on the inclined plane surface called, with the metal slitted strip, the raceway. The column of buttons is confined in the raceway by a spring, and the last button has its eye in such a position that the needle will pass through it while it remains in the raceway. The spring is opened by the button itself, which is held in its place by the needle and thread, and pulled out of the raceway when the latter vibrates away from the needle path. In Morley's patent the raceway or trough is stationary at a distance from the path of the needle, and two ways are described of carrying the buttons successively from the end of the trough to the path of the needle.

While there is an absence in the button-feeding mechan-

ism of the Lancaster machine of the several parts above mentioned, there are present in it the reciprocating brush at one end of the raceway and the light spring at the other, which are not found and not needed in the Morley feed mechanism.

So it is not strange that plaintiffs' expert, Mr. Chapin, says (page 16), "The specific mechanism by which the buttons in said machine are so separated from each other, one by one, is not the same as that employed in the Morley patent, but the result, so far as providing buttons one by one for the needle to operate upon, is the same."

He could only find a similarity in *the general results* accomplished.

But if the operator should present the buttons to the needle with a pair of nippers, or if by some new means the buttons could be drawn there by a magnet, "*the result*, so far as providing buttons one by one for the needle to operate upon, is the same." (Record, p. 16.)

Defendant submits that *results* are not patentable, and the Lancaster machine, not containing the *specific mechanism* of the Morley patent for feeding buttons to the needle, nor any fair equivalent for that mechanism, does not infringe it in that particular.

In answer to cross-interrogatory 50 Mr. Chapin claims that the Morley feed-trough might be organized into the Lancaster machine by "letting the shanks of the buttons project outside of the raceway and giving the lower end of the raceway a quarter turn to bring the buttons to such a position that the needle would pass through the eye of each one."

That is stated as the main modification necessary to adapt the Morley feeding-trough or raceway to the Lancaster machine. But obviously it is not the *main modification*. For

the Morley trough is stationary while the "raceway in the Lancaster machine" has "a swinging and longitudinal" motion (page 16) to get it out of the way of the needle and the loop spreaders after delivering the button.

And it also has a backward motion with the needle when the latter is through the button eye and moves to feed the fabric and to get the needle in position to descend and bring up the second loop outside the button eye.

So the method of transferring the buttons from the hopper to the needle is substantially different in the Lancaster machine from the Morley patent.

(2) As to *stitching mechanism:*

The Morley patent (Record, p. 135) says, "The objects of my invention are to form a double-threaded stitch on the top side of the material, being sewed upon transversely to the direction of feed, and on the reverse side of the material two parallel lines of stitches at right angles to the first-named ones."

It is obvious from the mere inspection of "Defendant's Exhibit Morley and Lancaster Stitches" that "the objects" of Morley's invention are not attempted in the Lancaster machine. For the Lancaster stitch has no stitch on the top side of the material transverse to the line of feed, and no parallel lines of stitches on the reverse side of its material.

In the Morley patent a bight or loop of thread is carried up by the eye-pointed needle, and a little later the hook needle comes up and inserts itself between the needle and a side of the loop; they both descend, the hook needle carrying down the bight of thread, and the first transverse stitch is made on the button side of the fabric. This stitch has been called a *stay stitch*. Its only use is to anchor the

thread or fasten the end before the second transvere stitch is taken through the button eye.

So the first transverse stitch disfigures a boot or shoe and cuts two holes in the leather, and its only effect is to fasten the thread so the strain on the button will not so easily pucker up the fabric or pull out the thread. On the side of the fabric reverse from the button the eye needle carries a single, and the hook needle a double line of thread, making the "two parallel lines of stitches" mentioned in the patent.

The result is a "peculiar kind of chain stitch" (*Renwick*, p. 34, near bottom), which was used long before the Morley patent in a straw-sewing machine patented to S. S. Turner, December 3, 1872. (Page 36, at bottom.)

Every alternate transverse stitch is through the eye of a button.

Turning to the Lancaster machine, Mr. Renwick says (page 37), "This machine makes an entirely new stitch,— a stitch substantially different from any of those described in the Morley patent, and requiring an entirely different mechanism to make it."

But, directly after, Mr. Renwick notes the fact that the button eye really makes part of the stitch in the Lancaster machine, and that unless a button was supplied no stitch would be made. For convenience, or for want of a better term to express the idea, he continues to call that a STITCH which more nearly resembles a *knot*.

Without even taking Mr. Renwick's statement for the fact, if the "Defendant's Exhibit Lancaster Machine" is operated without any buttons in the raceway, it will be seen that no stitches are taken or knots made.

No loops even will be left in the fabric, the tension pulling back those which the needle draws up.

Only a succession of holes is left.

When the button and fabric are in position, the first movement of the machine carries the needle directly through the eye of the button and through the fabric.

The needle, while down, and the raceway are moved to feed the fabric, and then the needle returning brings up a loop of thread, when it oscillates to its first position and again descends outside the eye of the button and *through* the loop of thread first drawn up, and a second loop is drawn up.

This second loop is outside the eye of the button and inside the first loop.

Now a most ingenious contrivance is brought into use. As the loops now are, the first one is locked by the second one, but the second, if taken from the needle hook, is entirely free, and would, if not locked, be pulled beneath the fabric and machine work-plate, which would of course release the first loop and it in turn would be pulled below.

But at the instant when the needle for the third time commences to descend, and thereby releases the second loop from its hook, a small hooked, wedge-shaped contrivance enters the loop, seizes either side of the loop on its two hooks, and instantly begins to retreat, the two hooks at the point of the wedge separating as it retreats. The loop of thread is distended into a triangular shape and carried completely over the button, when the hooks come together, drop the loop of thread, and the tension draws the loop around the eye of the button, thus securely locking the second loop to the button-eye, and thereby locking the first loop by the second.

It is really tying a peculiar knot around the button-eye; the knot being formed of three loops,— two loops of thread, and the button-eye as a third loop.

Successive buttons are attached by the same operation.

In answer to cross-interrogatory 37 (page 19), Mr. Chapin says, "The stitching or sewing mechanism of the Lancaster machine and that shown and described in the Morley patent are different, . . . and the form of stitch by the two mechanisms is different."

And there would seem to be no room for doubt upon that point.

The *result* here is radically unlike any result in the Morley patent.

(3) The *fabric-feeding mechanism* of the two machines is substantially the same.

"Both machines feed by means of the needles, that is, the needles while inserted in the cloth move in the direction of the feed, carrying the cloth or fabric along with them, and in both machines this motion of the needle or feed is derived from revolving cams." (Page 33, bottom.)

"This kind of feed was common in machines for sewing leather long prior to the date of the Morley patent." (Page 34, top.)

In answer to cross-interrogatory 47, Mr. Chapin says, "I am aware that oscillating needle-bars and means for supporting them have been for many years elements of what is called a needle-feed sewing machine."

The sum of the testimony by both experts is simply this:

The two machines have substantially the same cloth-feeding mechanism, the old familiar needle feed.

Each machine has mechanism for presenting the buttons, one at a time, to the needle, which mechanisms differ materially, and, although they accomplish the same general result, to wit, the presentation of buttons, one at a time, to the needle, yet they operate in very different ways.

Each machine has mechanism for attaching the button to the fabric by thread, which mechanisms differ radically in construction and mode of operation, and accomplish radically different results; for the Lancaster knot is a radically different thing from the Morley stitch.

So it is submitted that if we give to the Morley patent the broadest construction to which a first or bottom patent is entitled, it is true that the Lancaster machine does not contain two of the three elements in combination in the Morley patent.

But if we go further and consider the efforts of former inventors in this same field, we must see at once that the art of sewing buttons by machinery was not introduced by Morley.

As long ago as 1853 Julian Bernard patented a machine in England for sewing disc buttons to fabrics.

Keith patented a machine for sewing shank buttons to fabrics in 1872, No. 130,581, and Taft, in 1875, a machine for the same purpose, No. 170,784. And there are several other patents referred to on page 155, each of which contains in substance some part or parts, or principle, of the Morley patent. Mr. Chapin, in his rebuttal testimony (page 123), does not think either patent describes all the mechanism which is used in combination in the Morley machine.

That may all be true and not affect the proposition that a decided advance had been made in the art of attaching buttons to cards, cloth, leather, or other fabrics, and that Morley's invention is an improvement in the art of attaching buttons, and not an invention in an entirely new field like the telephone.

And it is not a sufficient answer to the proposition to say that the former machines or inventions in that field were little used and of no practical advantage over hand work.

For we submit that all the evidence as to the practicability

and usefulness of the Morley machine offered by defendant shows conclusively that the Morley machine is not practicable and useful to shoe manufacturers, for whom it was intended.

Mr. Harris and other large manufacturers have tried the Morley machine and will not use it.

Harris, p. 99; *Jackman*, p. 46; *Fearey*, p. 52; *Brennan*, p. 60; *Knight*, p. 64; *Jennings*, p. 75; *Bridgham*, p. 90; *Musso*, p. 96; *Flynn*, p. 108.

Some have thrown aside the machine after the license fee of $150 had been paid, and have commenced sewing buttons on by hand.

Experienced manufacturers object to it for the following reasons, and will not use it:—

1. It cuts the stock by making four holes for sewing each button.
2. The buttons cannot be sewed on after the shoes are vamped or have the quarters and vamps sewed together.
3. The stitch, being a chain stitch, will ravel if the end of the thread is pulled.
4. The buttons are not independently secured to the fabric, and if one comes off all are liable to follow.
5. The work looks bad.
6. It uses too much thread.

The Lancaster machine is the exact opposite of the Morley machine in these particulars.

There is a decided saving in time and expense in using the Lancaster machine as compared with hand work or the Morley machine. (*Sawtelle*, p. 83.)

It is true the treasurer of the Morley Company undertakes to explain away these objections.

The machine was new and made by a poor mechanic, he says.

There was a prejudice against royalty machines.

But, curiously enough, his testimony is the very strongest against his own machine.

He says in January, 1883, they had out about 50 machines, and in January, 1884, had only increased the number to "about 100," of which "from 70 to 80" were in use. (Page 116.)

But stranger still was his statement that they only had "6 or 8" (page 123) machines in Lynn, the great centre of the shoe industry in the United States.

It is elsewhere shown that his estimate was too large (page 131), and that two of the users of the Morley machine in Lynn, within a few weeks after Mr. Sinclair testified, put out the Morley and commenced to use the Lancaster machine.

On May 10, 1884, after two and a half years' effort to introduce their machine, only three manufacturers in the great shoe-manufacturing city of the United States use the Morley machine (page 131), while in six months from October 30, 1883, the time the first Lancaster machine was delivered to a manufacturer, there were twenty-five machines in use in Lynn by manufacturers, and five in other places.

The license fee and royalty are the same for each machine. (Pages 117 and 131.)

No manufacturer who has used the Lancaster machine has given it up (page 131, interrogatory 15), and several have testified that there was a considerable saving in using it, and that they preferred it in every way to the Morley and to hand work.

Possibly Mr. Morley has done better than the early inventors in this field, but his machine is evidently very far from perfection, or even usefulness.

Now the practical question in this matter is, shall Morley be allowed so broad a construction for his patent as to cut off all further invention in the art of sewing on buttons by machinery?

Or shall he be limited to the mechanism which he uses, including, of course, any other which is substantially like it or an equivalent for it?

Morley set about producing a machine for sewing buttons on to shoe uppers. It was plain as of course that he must either have a mechanism for feeding the buttons, or else present them by hand, and also that he must either have a mechanism for feeding the shoe upper or else feed that by hand; hence there was no possibility of his inventing or discovering the combination *in the abstract* of (*a*) button-feeding mechanism; (*b*) sewing mechanism; (*c*) shoe-feeding mechanism; for all he could do was to select or invent some sort of mechanism for doing these things, and, having selected or invented such mechanisms, organize them into a working machine.

Of course he is entitled to a patent for each mechanism, if he invented each; and of course he is not entitled to any patent for any mechanism which he merely selected and did not invent; and equally of course he is entitled to a patent for his mode of organizing these mechanisms into a working machine.

But is it not obvious that under the plainest principles of law others had and still have just as much right to produce a machine for sewing buttons on to shoe uppers as Morley had? In the exercise of this right they must, of course, deal fairly with Morley, and must avoid whatever may be fairly regarded as an appropriation of anything that Morley taught the community.

Now what is it that Morley taught that Lancaster has appropriated? Not the button-feeding mechanism, for there is no claim in the Morley patent for any part of this mechanism which Lancaster is alleged to infringe. Not the sewing mechanism, for Morley's sewing mechanism is confessedly old. And not the feeding of the fabric by the lateral motion of the needle, for that is the old familiar needle feed.

But what did Morley teach as to organizing these three mechanisms into a working machine? Here he displayed much inventive genius, for it is probably true that he is the first to sew on shank buttons by stringing them on a stitch produced by two feed motions, one short and one long, and after he had clearly conceived this very ingenious idea, all he had to do was to place a button shank (or anything else through which the needle could pass) in the path of the needle so that the thread would be passed through it, and his task was done. In short, he devised a new button-fastening stitch, capable of being made in a large variety of forms, by a large variety of sewing mechanisms (as is fully set forth near the close of his specification), the vital features of which are, first, that it is alternately short and long (*i.e.*, to suit the thickness of wire of which the button-shank is made and to suit the spaces between the buttons), and, secondly, that it is adapted to have a staple of wire, the button shank, strung upon it as a bead is strung upon a thread.

But neither of these two features without the other is of any value; that is, without *both*, the stitch is not suitable for fastening buttons to fabric; it is not Morley's stitch, but the old stitch for straw goods.

While it is true that Morley cannot cover all conceivable mechanisms for sewing on buttons by means of a stitch having these two vital features, yet it is difficult, if not impossible, to conceive of any such mechanisms which could

not fairly be held to be the substantial equivalents of these described and claimed in Morley's patent; and why? Is it not because it is clear that any one who organizes any mechanisms, however different from Morley's, into a machine which makes a stitch alternately long and short, and upon which the buttons are strung, has in truth wrongfully appropriated the substance of what Morley taught?

But it turns out that Morley's solution of the problem of the attachment of buttons to shoe uppers by automatic machinery, while highly ingenious, if of any considerable merit, is yet but an imperfect solution; and Lancaster tries his hand; and it is assumed that no one will dispute his right so to do.

Now Lancaster has himself displayed a much rarer quality of inventive genius than anything indicated in Morley's pattent, for he is the first to make his stitch, which is in truth a knot which was unknown wholly, so far as appears, before Lancaster's invention; and whose striking ingenuity it is confidently believed will force itself upon the attention of the Court.

Is it not too clear for argument that this stitch of Lancaster's is radically unlike anything previously hinted at in Morley's patent, and that both it and the mechanism for producing it are most beautiful inventions: so strikingly new and beautiful that it is idle to assert that anything in either was copied from anything that Morley discovered or invented?

In short, is it possible to conceive of two mechanisms for sewing buttons on to shoe uppers which can be more radically unlike than Morley's and Lancaster's?

And is it not plain that Morley's patent cannot cover Lancaster's machine, unless it be construed to be a patent for all possible machines adapted to sew buttons on to shoe uppers?

INFRINGEMENT.

The question of infringment is decided by the answer given to the following questions selected from the books:—

"Did the defendant attempt to copy the model and to make some almost imperceptible variation, for the purpose of evading the right of the patentee?"

"Whether it [Lancaster machine] is not in substance and effect a mere colorable evasion of the plaintiffs' patent?"

"Is it a substantial equivalent or colorable imitation?"

"The question is whether the change be colorable and formal, or substantial and essential."

Is the Lancaster machine "merely the work of a mechanic"?

Whether or not the improvement in defendant's machine "is gained by the use of well-known mechanical equivalents?"

Here is what is said of *mechanical equivalent* or *substitute:*

"It is sufficient to constitute known mechanical substitutes that when a skilful mechanic sees one device doing a particular thing, that he knows the other devices, whose uses he is acquainted with, will do the same thing."

Carter v. *Baker*, Fisher's Pat. Cas. 404.

Defendant affirms as a well-established proposition of law that his machine does not infringe unless it contains all the elements of the Morley combination, or their equivalents or substitutes, within the meaning of the patent law.

TANEY, C.J., says, in speaking of a *plough* composed of a *new* combination of elements that were severally *old*, —

"The use of any two of these parts only, or of two combined with a third, which is substantially different in form or in the manner of its arrangement and connection with the others, is therefore not the thing patented. It is not the same combination if it substantially differs from it in any of its parts."

Prouty v. *Ruggles*, 16 Pet. 341.

Eames v. *Godfrey*, 1 Wall. 78, is an instructive case:

"The patent was for a combination of mechanical powers for a new and useful improvement in boot-trees. . . .

"The plaintiff did not claim that the defendant had used the same mechanism that he did for distending the leg of the boot-tree, but had used all the other parts of his combination, and that the mechanism which the defendant used, although different in construction and operation from that described in the patent, *yet performed the same function*," and therefore, as plaintiff claimed, infringed.

In the Circuit Court a ruling was given in accordance with that claim of the plaintiff.

This Court did not sustain that ruling.

This Court said, as to *performing the same function*, —

"The law is well settled by repeated adjudications in this Court and the Circuit Courts of the United States, that there is no infringement of a patent which claims mechanical powers in combination unless all the parts have been substantially used. The use of a part less than the whole is no infringement. . . .

"This view of the law was wrong on principle and authority. Eames had a right to use any of the parts in Godfrey's combination, if he did not use the whole; and if he used all the parts but one, and for that substituted another

mechanical structure substantially different in its construction and operation, but serving the same purpose, he was not guilty of an infringement."

Mr. Chapin, plaintiffs' expert, admits (cross-int. 29, p. 16) that defendant's "*specific mechanism*" for feeding buttons "*is not the same*" as Morley's, but says, "*The result . . . is the same.*"

And he admits (cross-int. 37, p. 19) that "*the stitching mechanism . . . and the form of the stitch*" in the two machines are different.

Mr. Chapin says the result is the same; that is, the mechanism of defendant "*performed the same function.*"

"It is settled law, that, where the respondent in constructing his machine omits one of the ingredients of the complainant's combination, he does not infringe the complainant's patent."

Mr. Justice CLIFFORD, *Dunbar* v. *Meyers*, 94 U.S. 187, p. 202.

The head-note in *Gage* v. *Herring*, 107 U.S. 640, is as follows: —

"2. A patent for a combination of several elements is not infringed by using less than all the elements of the combination."

To the same effect are —

Gould v. *Rees*, 15 Wall. 187.
McMurray v. *Mallory*, 111 U.S. 103.
Gill v. *Wells*, 22 Wall. 1.
Brown v. *Davis*, 116 U.S. 237.
Sargent v. *Hall Safe Co.*, 114 U.S. 63.

EQUIVALENTS.

The question at issue in many of the reported cases is whether or not defendant uses for a part or element omitted some well-known equivalent or substitute; whether the defendant's substitute is essentially or only colorably different from the element of the patent which is omitted.

Any consideration of that subject, in view of the testimony of plaintiffs' expert above quoted, seems entirely unnecessary.

On that subject there is no need of testimony.

It must be perfectly apparent to any one on inspection of the two machines that the stitching mechanisms are substantially and radically different.

"If it be a claim to a combination and be restricted to specified elements, all must be regarded as material, leaving open only the question whether an omitted part is supplied by an equivalent device or instrumentality."

Mr. Justice BLATCHFORD, *Fay* v. *Cordesman*, 109 U.S. 408, page 421.

"The combination here claimed consists of five parts or elements, namely, . . .

"It is well-known doctrine of patent law that the claim of a combination is not infringed if any of the material parts of the combination are omitted. It is equally well known that if any one of the parts is only formally omitted and is supplied by a mechanical equivalent performing the same office and producing the same result, the patent is infringed."

The parts of the two machines are then compared; the defendant's meter is found to contain only four of the five

parts; the fifth part or element, in the opinion of the Court, is wanting.

"The defendants effect the desired *result* of communicating rotary motion to the valve without any such shaft, or anything equivalent thereto. . . .

"They use a crank, it is true; but it is attached directly to the rotary valve and is a part of it." . . .

"We think no such equivalent is supplied in this case."

Held, that defendant did not infringe.

Mr. Justice BRADLEY, *Water Metre Co.* v. *Desper*, 101 U.S. 332.

PLAINTIFFS' BROAD CLAIM.

The only ground of infringement which the plaintiffs can claim is that Morley's patent covers broadly, *very broadly*, the combination of three sets of instrumentalities; to wit, —

(1) Button-feeding,
(2) Stitching, and
(3) Cloth-feeding mechanism.

Mr. Justice COLT, in giving his opinion in this case, after declaring that the button-feeding and stitching mechanisms of the two machines were essentially different, says, —

"Unless, therefore, the Morley patent covers all forms of sewing mechanisms, or all forms in combination with button-feeding and cloth-feeding devices, there can be no infringement."

A radical difference in the specific mechanism and elements in combination of the two machines drives the plaintiffs to that claim.

The plaintiffs claim that one sentence in Morley's specification allows Morley to hold as an infringement any machine which *automatically sews buttons to fabrics*. The language is found (Record, p. 144) in the Morley patent, in the paragraph before the claims:

"Having thus described the machine and construction set forth in the drawings, I wish it to be undersood that the same is only one of different mechanisms which I have contemplated, and which may be effectually employed for carrying out the main feature of my invention, to wit, *the automatic mechanical sewing of buttons to a fabric.*"

Morley then describes other means which may be adopted in the place of his sewing device, and follows that with the several claims of his patent.

Mr. Chapin, plaintiffs' expert, says that defendant's machine infringes Morley's patent, and gives his reason therefor on page 11, interrogatory 7:

"Inasmuch as I find in said Lancaster machine the combination of button-feeding mechanism, appliances for passing the thread through the eye of the buttons and locking the loop to the fabric and feed mechanism." The whole answer is less than a page, and mentions not a single part or element of mechanism by way of comparison between the two machines. So it seems plain that the logical deduction from the specification, claim, and evidence above noted, is this: plaintiffs claim all machines having the three elements named to be an infringement of Morley's patent. But the claims of Morley's patent are limited, as they must be, by the words "substantially as set forth."

He has no claim for "*automatic mechanical sewing of buttons to the fabric.*" He is limited to the claims he makes.

"The scope of Letters Patent . . . cannot be enlarged by the language used in other parts of specification."

R.R. Co. v. *Mellon*, 104 U.S. 112, p. 118.
Western Electric Manfg. Co. v. *Ansonia Company*, 114 U.S. 447.

But even if Morley in proper form had set up the claim to the "*automatic mechanical sewing of buttons to the fabric*," the famous case of *O'Reilly* v. *Morse*, 15 Howard, 62, would seem to be a complete answer.

Here is Professor Morse's eighth claim:

"I do not propose to limit myself to the specific machinery or parts of machinery described in the foregoing specification and claims, the essence of my invention being the use of the motive power of the electric or galvanic current, which I call electro-magnetism, however developed, for marking or printing intelligible characters, signs, or letters, at any distances, being a new application of that power of which I claim to be the first inventor or discoverer."

How strikingly similar is this language in its intent to that above quoted from Morley's specification.

Morse wanted to cover all means capable of transmitting electro-magnetic energy and recording signs or letters at a long distance.

Morley wants to cover all machinery capable of the "*automatic mechanical sewing of buttons to a fabric.*"

The state of the art was much in Morse's favor as compared with Morley.

Morse was undoubtedly the first discoverer. The *thought* was *new*. And the machinery by which the current was employed to make signs was absolutely new.

The sympathy of the Court must have been with the

great inventor, who had long struggled against poverty and discouragements.

Yet the Court held that the above-quoted claim could only cover the machinery which he himself used, or anything substantially the same, for transmitting signs by means of electro-magnetism.

Although Morse was the first to use electro-magnetism to transmit signs, the majority of the Court have said in substance, "You can have a patent only for the way by which you cause electro-magnetism to operate for the transmission of intelligible signs."

In the face of that decision it seems simply ridiculous for plaintiff to claim any and every machine to be an infringement which is capable of "*the automatic mechanical sewing of buttons to a fabric.*"

For many years before Morley's patent, inventors have been seeking a machine to sew on buttons, as is shown by the several patents taken out and elsewhere referred to.

Now can Morley cover any and every machine having (1) "*button-feeding mechanism,*" (2) "*appliances for passing a thread through the eye of the buttons and locking the loop to the fabric,*" and (3) "*feeding mechanism*"?

Can a proper claim for an organized machine containing those elements in combination be made to cover any and every machine for "*the automatic mechanical sewing of buttons to a fabric*"?

Is not that simply what Mr. Justice GRIER called a "transcendental abstraction magnified into a monpoly"?

There seems no middle ground between claiming that Morley's patent is infringed by any and every automatic machine for sewing on buttons, and going into an examination of the parts of Lancaster's machine to see whether it

is *like* or *unlike*, in its several elements, the machine described in Morley's patent.

Professor Morse says, "I do not propose to limit myself to the specific machinery or parts of machinery described."

Now does Morley propose any limit? If he does not, the case of *O'Reilly* v. *Morse* stares him in the face. If he does propose to limit his patent to the combination of mechanisms or instrumentalities or their equivalents or substitutes, we must certainly examine and compare those several elements in the two machines. But right there we are met by the admission of plaintiffs' expert that the button-feeding and stitching mechanisms of the two machines are essentially different, and resemble each other only in the final *results* accomplished.

RESULTS.

The defendant claims that results are not patentable, but only specific mechanism or combinations of mechanism to accomplish results. The following authorities sustain that view:—

Seymour v. *Osborne*, 11 Wall. 516.

"Any one may lawfully accomplish the same end without infringing the patent, if he uses means substantially different from those described."

TANEY, C.J., in *O'Reilly* v. *Morse*, 15 How. 119.

"The end or *result* produced is not secured by the patent, but only the *substantial means* used and *specified* to produce the *end or result* — these and nothing more.

"The same end or *result* may be produced by means other than those substantially described in the specification, without infringing the patent."

Burr v. *Cowperthwait*, 4 Blatch. 163–167.

The *American Pin Co.* v. *The Oakville Co.*, 3 Blatch. 190, is a very instructive case upon the questions involved in the case at bar. INGERSOLL, J., gives the opinion.

The case establishes:

1. That since defendant was using a machine for which a patent was granted to him, he had *prima facie* a perfect right to use it.

"The patent [to defendant and others] is *prima facie* evidence that he has an exclusive right to that which the patent purports to grant; that he is the first inventor of *the machine specified* and described in his specification" (p. 195).

To follow the substance of the case:

The patent to Mathison (Lancaster machine) affords *prima facie* evidence, therefore, that the means described by him to produce this result of attaching buttons to fabrics, are substantially different from the means described by Morley.

(Unquestionably the commissioner examined Morley's patent and compared Mathison's machine therewith.)

"And the plaintiffs, to succeed in the case, must counteract this *prima facie* evidence by sufficient countervailing testimony."

2. That Mr. Chapin was wrong when he claimed that the Lancaster button-feeding and sewing mechanisms, though differing from Morley's, infringed Morley's patent, because the result accomplished was the same.

Plaintiff's machine was a "machine for sticking pins into paper." It was the older machine. Defendant's was "a new and useful machine for sticking pins."

The objects or results to be accomplished by each machine were: (1) To separate the pins from a mass; (2) to present them in proper order in a position to be stuck in the

paper; (3) To crimp the paper preparatory to receiving the pins; and (4) to drive the pins into the paper.

Each machine contained parts and operating mechanisms to accomplish the several results, but the Court found the means used to be essentially different.

As to the fact of a difference in the pin-feeding mechanism, the opinion says, —

"The essential means used in defendant's machine to bring about *the result*, to wit, a separation of the pins from the pile or column, are, therefore, substantially different from the means used in plaintiff's machine to produce the same result.

"In this respect the two machines operate differently and depend upon distinct organizations. The same substantial means are not used in each." (Page 199.)

That *fact* being established, the *conclusion of law* is announced in a single sentence:

"*One is not an infringement upon the other*" (p. 200).

CLIFFORD, J.:

"Patents for a machine will not be sustained if the claim is for a *result*, the established rule being that the invention, if any, within the meaning of the patent act, consists in the means or apparatus by which the *result* is obtained, and not merely in the mode of operation, independent of the mechanical devices employed; nor will a patent be held valid for a principle or for an idea, or any other mere abstraction."

Fuller v. *Yentzer*, 94 U.S. 288.

The patent in that case was for an attachment to a sewing machine. The main question raised seemed to be whether the parts substituted in defendant's machine were substan-

tially the same or equivalents of the corresponding parts in plaintiff's patent. Four justices dissented from the finding of fact on the evidence, but not, as it appears, from the proposition of law as above laid down.

"It is not only necessary to an infringement that the arrangement which infringes should perform the same service or produce the same effect, but, as Mr. Justice NELSON said in *Sickles* v. *Borden*, 3 Blatch. 535, it must be done in substantially the same way."

Werner v. *King*, 96 U.S. p. 230.

In that case the plaintiff's patent was for a fluting machine; the defendant's, although accomplishing the same result, was held not to do it in substantially the same way.

"In order to constitute an infringement, the whole combination must be used, because he claims not the various parts, but the whole combination together. The plaintiff cannot claim what is called 'double dropping of corn;' that is *a result* or an *effect*. He can only claim the double dropping by the particular mode which he has devised. Any one can produce the same results by other and different modes and still not violate a claim of the plaintiff."

Case v. *Brown*, 2 Wall. 320, p. 325.

The above language was part of the charge to the jury in the Circuit Court.

In giving the opinion of this Court, GRIER, J., said (p. 328): "The instruction there quoted is a correct exposition of the law."

"In determining the question of infringement, the Court

or jury, as the case may be, are not to judge about similarities or differences by the names of things, but are to look at the machines or their several devices or elements in the light of what they do, or what office or function they perform and how they perform it, and to find that one thing is substantially the same as another if it perform substantially the same function in substantially the same way to obtain the same result; always bearing in mind that devices in a patented machine are different in the sense of the patent law when they perform different functions, or in a different way, or produce a substantially different result."

CLIFFORD, J., in *Machine Co.* v. *Murphy*, 97 U.S. 120, p. 125.

That was a suit for an infringement of a patent for making paper boxes, and in that case, after examining the details or specific mechanism of the two machines, the differences were found to be merely colorable and in form only. Therefore defendant was held to have infringed.

Mr. Justice BLATCHFORD:

"It is true that the *result* in each arrangement is to hold the whip steady or firm in a socket, but the mechanisms are different." *Held* to be no infringement.

Worden v. *Searls*, 121 U.S. 14, page 23.

In the following cases the patents of plaintiffs for machines or mechanical apparatus were severally held not to be infringed by the machines or apparatus of defendant, although defendant's machines accomplished substantially the same *result*. In each case it was held that some part or element of plaintiff's machine either was altogether omitted or was

supplied by some other device which was not a mechanical equivalent for the defendant's:

Sharpe v. *Riessuer*, 119 U.S. 631.
Grier v. *Wilt*, 120 U.S. 412.
Snow v. *Lake Shore Railroad*, 121 U.S. 617.

In *Electric Co.* v. *Hall*, 114 U.S. 87, page 96, an infringement is claimed by the plaintiff of certain elements by which electric signals on the "Block" system were operated.

It is a claim for a combination and not for the separate elements.

Mr. Justice MATHEWS, in delivering the opinion, says, "The object of the patented combination was the accomplishment of a *particular result*, that is, to work electric signals on what was known as the Block system, by means of circuits operated by a single battery instead of many. But this result or idea is not monopolized by the patent. The thing patented is the particular means devised by the inventor by which that result is attained, leaving it open to any other inventor to accomplish the same result by other means. To constitute identity of invention and therefore infringement, not only must the result attained be the same, but in case the means used for its attainment is a combination of known elements, the elements combined in both cases must be the same, and combined in the same way, so that each element shall perform the same function, provided, however, that the differences alleged are not merely colorable according to the rule forbidding the use of known elements."

The opinion then goes on, and finds that the defendant "dispenses altogether with" certain things, and "employs instead" some other things.

Counsel for plaintiffs attempts to draw a distinction between what they call *primary* and *secondary* inventions. The rule of law on which they rely is in *McCormick* v. *Talcott*, 20 How. 402. They claim the rule as to equivalents is different when applied to what they call a primary invention from what it is when applied to a secondary invention. At any rate, they claim that the rule as to equivalents should be much more liberally construed in favor of the primary invention than would be the case as to improvements. But it is to be observed as to *McCormick* v. *Talcott*, that the Court held only those persons to be infringers of McCormick's machine "*who make dividers operating on the same principle and performing the same functions by* ANALOGOUS MEANS *or equivalent combinations.*"

That case was evidently strongly contested by able counsel. Mr. Justice DANIEL dissented and wrote an opinion.

The case gives a narrow construction to the plaintiff's patent, and does not hold the defendant to be an infringer.

The majority of the Court say of the defendant's machine, "It is substantially different both in form and in combination from that claimed by the complainant, and is CONSEQUENTLY no infringement of his patent."

On the other hand, Mr. Justice DANIEL, in his opinion, says (page 412) that defendant's divider is "in theory or principle, in manner of its operation, in its effects or results, and it may almost be said in its minute constituent portions and formations, *identical* with the instrument invented by and patented to the appellant, and *therefore* an infringment of the rights guaranteed to him by the government."

The question considered and decided was whether the divider patented to McCormick and the instrument put in use by the defendant "are essentially the same or are essentially or substantially different."

The decision is an authority in favor of a limited claim.

The defendant only asks to have his machine examined for the purpose of determining, in the language of the above quotation, whether it is a machine "operated on the same principle, and performing the same functions by *analogous means or equivalent combinations.*"

That case also seems fairly to be an authority for the proposition that *results* are not patentable, for it was conceded that the *result* accomplished by the divider in both machines was substantially the same. The only question was whether the means by which it was accomplished were analogous.

Mr. Justice GRIER, in giving the opinion of the Court in *Burr* v. *Duryee*, 1 Wall. 531, p. 573, quotes from that part of McCormick and Talcott relied on by plaintiff's counsel, and then comments upon the same as follows: "But it has been argued that, though not a colorable *invasion* of the patentee's claim, it is an *evasion* of his patent which is equally injurious. If so, it is *damnum absque injuria*. Every man has a right to make an improvement in a machine and *evade* a previous patent, provided he does not *invade* the rights of the patentee."

Any authorities upon the construction of process patents like *Tilghmann* v. *Proctor*, 102 U.S. 707, can have no bearing upon the claims in the Morley patent.

Neither is Morley's invention in the nature of a discovery. He did not invent the idea of sewing on buttons, neither did he discover the possibility that buttons might be sewed on by a combination of (1) *button-feeding mechanism*, (2) *sewing mechanism*, (3) *cloth-feeding mechanism*. He simply invented mechanism in combination by which buttons might be sewed on.

In *Burr* v. *Duryee*, *supra*, plaintiff's invention was an improvement in machinery for making hat bodies and in the process of their manufacture.

Mr. Justice GRIER, in the opinion, says plaintiff's invention "is not within the category of those inventions which consist in a new application of certain natural forces to produce a certain result to which they had never before been applied, and which when once pointed out required no invention to construct devices for its application. Such inventions partake of the nature of discoveries." (Page 568.)

The case of *McClurg* v. *Kingsland*, 1 How. 202, is cited in the opinion as an illustration:

"That the invention of Wells [plaintiff] comes within the category of a machine cannot be disputed. . . . A machine is a concrete thing. . . . A machine is not a principle or an idea. . . . Because the law requires the patentee to explain the mode of operation of his peculiar machine which distinguishes it from others, it does not authorize a patent for a 'mode of operation as exhibited in a machine.' . . . All others have an equal right to make improved machines, provided they do not embody the same or substantially the same devices or combination of devices which constitute the peculiar characteristic of the previous invention." (Page 570.)

In the case of *Clough* v. *Barker*, 106 U.S. 166, which is relied upon by the plaintiff to sustain his broad claim to the "*automatic mechanical sewing of buttons to a fabric*," the Court held that the defendant used a well-known equivalent for plaintiff's gas-burner.

The decision was simply upon a question of fact as to the mechanism used in the two devices.

The principle of law was this (page 178): Any combination was held an infringement "which performed the same office in substantially the same way as, and were known equivalents for, his [plaintiff's] form of valve regulation."

Defendant does not object to the application of that rule of law in this case. Defendant simply contends that his sewing devices were not "known equivalents" for Morley's sewing devices, to say nothing of differences in button-feeding mechanism.

Mr. Renwick, defendant's expert, a man of wide experience (page 37, Record), says the Lancaster machine "*makes an entirely new stitch.*"

Mr. Chapin admits it.

The plaintiffs' counsel may say to some of the authorities above cited that they are dealing with what they call secondary inventions, that is, machines which are improvements upon or additions to other machines.

Defendant now desires to cite, in closing, two cases in each of which the plaintiff invented an organized machine for the purpose of accomplishing a certain result, and in each case the defendant invented another machine for accomplishing precisely the same result. In each case it was found by the Court that the plaintiff was the first person to invent or organize a machine for the purpose set forth, and in each case it was found on careful examination that the defendant used different elements or instrumentalities in his combination to accomplish the result, and in each case it was held that there was no infringement. The first of these cases is *Wicke* v. *Ostrum*, 103 U.S. 461.

WAITE, C.J., says (p. 467), —

"Before this invention, nails were driven singly and by

hand. . . . He was entitled also to the benefit of all the mechanical equivalents of his several elements, known at the time of his invention, if used in the same combination. . . . *From the evidence it is clear he was the first to put into practical use the idea of driving more than one nail at the same time in the manufacture of boxes by the use of machinery. The idea he could not patent, but his contrivance to make it practically useful he could.* . . .

"The defendant conceived the idea of driving nails horizontally instead of vertically, and made a machine for that purpose, which he patented. He does not use the spring jaws or the peculiar-shaped plungers of the Wicke machine, because he does not need them.

"As his object is to drive the nails horizontally, they can be laid in a groove and held there by gravity until forced into the board. . . .

"He thus has been enabled to dispense with two elements of Wicke's combination, in the absence of which that machine could not be successfully worked. Neither has he substituted any mechanical equivalent for what he has thus put aside. By changing the form of the machine and the manner of its operation he has no need of any such contrivances. He may use the equivalent of one half of the spring jaw of Wicke's machine, but the other half he does not want, nor anything else in its place, as the nail will lie where it is put until driven into the board." (Page 470.)

Held, there was no infringement.

The second case is *Dryfoos* v. *Wiese*, 124 U.S. 32.

Plaintiff's patent was for quilting apparatus. Defendant used something different to accomplish the same result.

No counsel appeared for defendant.

Mr. Justice BLATCHFORD says (p. 37), "It is contended for

plaintiff that as Beck was the *first to devise a combination* the gist of which is a feed feeding faster at one end than at the other, with a laterally moving gang or series of needles, and an intermittent feed when the needles are out of the stitches, he is entitled to cover all variations in the form of the feed, so long as by any means it operates to feed faster at one end than at the other; and that if that *result* is accomplished the mechanism must be an equivalent for that of the plaintiff.

"The plaintiff's patent must be limited to the mechanism described and claimed by him, and cannot be extended so as to cover all mechanisms for giving a circular direction to the feed motion, nor to the process of operation of the mechanism described in his patent; and the defendant's mechanism, in each form of his machine, cannot be regarded as merely an equivalent for the plaintiff's mechanism.

"The case is substantially like that of *Yale Lock Co.* v. *Sargent*, 117 U.S. 373."

Respectfully submitted by

J. E. MAYNADIER,
GEORGE E. SMITH,
for Appellees.